Metric

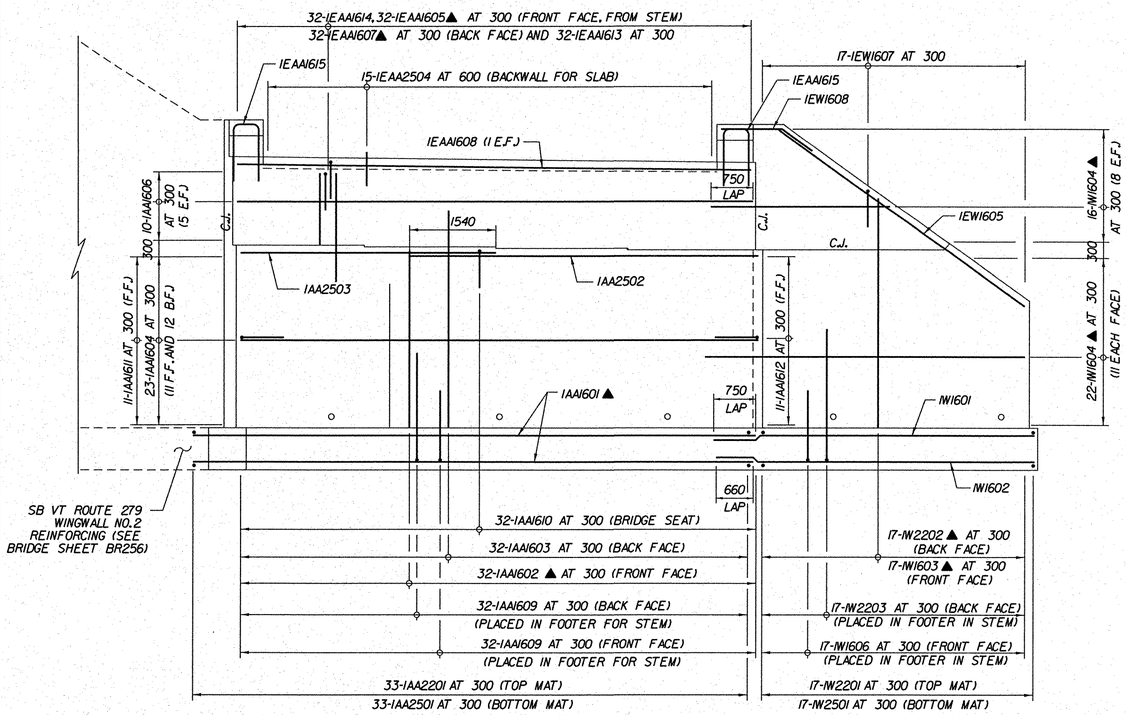

ELEVATION
(ABUTMENT 1 - RAMP A AND WINGWALL NO. 1)

SCALE 1:50

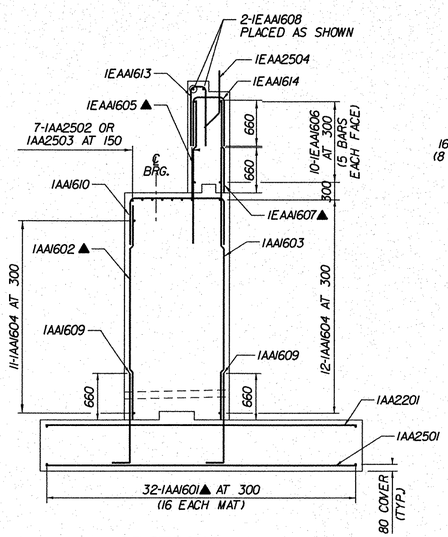

SECTION A-A
(ABUTMENT 1 - RAMP A)

(SEE BRIDGE SHEET BR272 FOR SECTION LOCATION)

SCALE 1:40

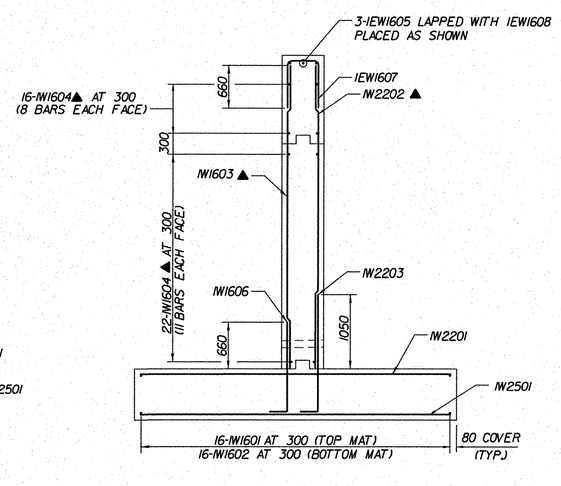

SECTION B-B
(WINGWALL NO. 1)

(SEE BRIDGE SHEET BR272 FOR SECTION LOCATION)

SCALE 1:40

LEGEND:

F.F. - FRONT FACE
B.F. - BACK FACE
E.F. - EACH FACE
C.B. - CORNER BAR
C.J. - CONSTRUCTION JOINT
▲ - CUT TO FIT IN FIELD

0 0.8 1.6 2.4 3.2 4.0m
SCALE 1:40

0 1 2 3 4 5m
SCALE 1:50

TVGA CONSULTANTS

STATE OF VERMONT
AGENCY OF TRANSPORTATION

Town Of BENNINGTON	Bridge No. B15S
Highway No. VT RTE 279	Log Sta. / Surv. Sta.
VT ROUTE 279 & RAMPS OVER ROARING BRANCH OF WALLOOMSAC RIVER	
ABUTMENT 1 REINFORCEMENT DETAILS (RAMP A)	
Designed By B.J. CARLSON	Drawn By R.G. COCOL
Checked By K.M. WOJTKOWSKI Date 06/08	Bridge Design Supervisor K.M. WOJTKOWSKI Date 06/08
PROJECT BENNINGTON	PROJECT NO. AC NH 019-1(51)
TVGA CAD Drawing No. RmpAA1RebDet.dgn	Date 02/02/2009
Bridge Sheet No. BR273	Sheet 260 of 367