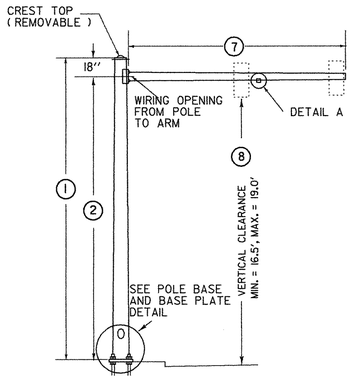

TYPE A

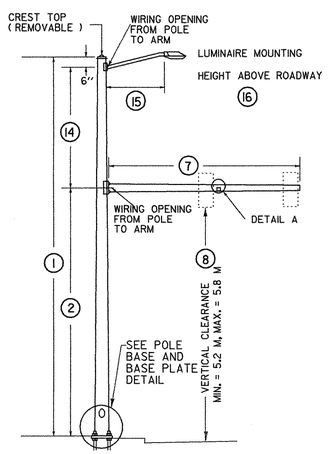

TYPE B

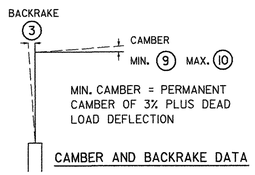

CAMBER AND BACKRAKE DATA

POLE BASE DIAMETER 4

POLE GAUGE 5

POLE TAPER RATE 6

ARM DIAMETER 11

ARM GAUGE 12

ARM TAPER RATE 13

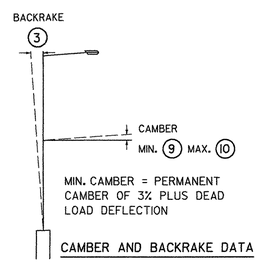

CAMBER AND BACKRAKE DATA

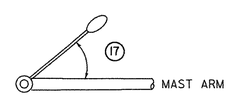

LUMINAIRE ORIENTATION

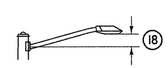

LUMINAIRE ARM RISE

SIGNAL CANTILEVER DETAILS

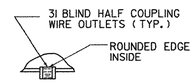

DETAIL A

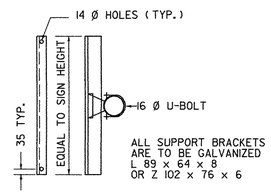

SIGN BRACKET DETAILS

ANCHOR BOLT DETAIL		
SIZE	L	T
31 X 1220	1068	203
38 X 1525	1373	229
44 X 2288	2135	229
51 X 2440	2440	229

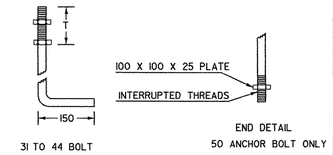

ANCHOR BOLT DETAIL

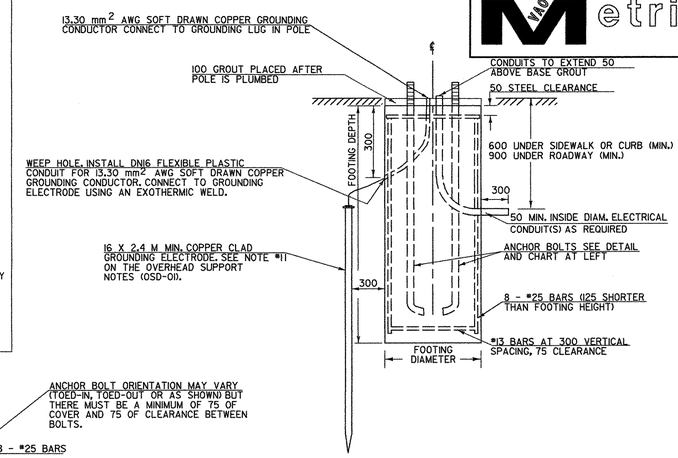

ELEVATION

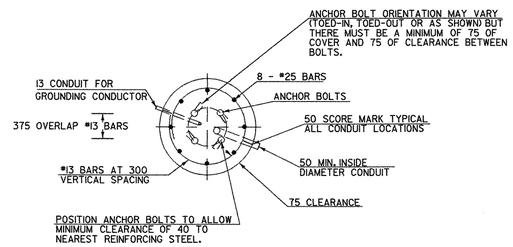

SECTION

TRAFFIC SIGNAL MAST ARM FOOTING DETAIL

(SPREAD FOOTINGS OR PILES ARE OPTIONAL)

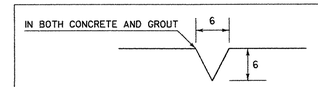

USED FOR CONDUIT LOCATION, SEE SECTION DETAIL AT LEFT

50 SCORE MARK DETAIL

NOTES:

1. SEE SHEET OVERHEAD SUPPORT NOTES OSD-01 FOR ADDITIONAL INFORMATION.
2. ALL DIMENSIONS IN MILLIMETERS (MM) EXCEPT WHERE NOTED.
3. STRUCTURE DIMENSIONS CHART TO BE COMPLETED AND SUBMITTED BY THE CONTRACTOR.
4. MAXIMUM EXPOSURE OF FOOTING ABOVE FINISHED/ EXISTING GROUND SHALL BE 100MM.

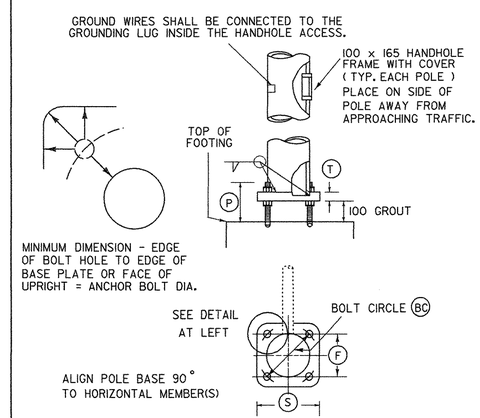

POLE BASE AND BASE PLATE DETAIL

STRUCTURE DIMENSIONS																												
POLE DATA								ARM DATA							LIGHTING DATA					FOOTING DATA		BASE PLATE / BOLT DATA					
POLE	TYPE	1	2	3	4	5	6	7	8	9	10	11	12	13	14	15	16	17	18	19	20	BC	F	S	T	P	ANCHOR BOLT SIZE

VERMONT AGENCY OF TRANSPORTATION

Stantec

PROJECT NAME: BENNINGTON

PROJECT NUMBER: AC NH 019-1(51)

FILE NAME: ...\plot files\zd307cltsnd.ptf

PLOT DATE: 3/3/2009

DESIGN SUPERVISOR: GREG EDWARDS

DRAWN BY: STANTEC

DESIGNED BY: MARC FOISY

CHECKED BY: GARY SANTY

TRAFFIC SIGNAL NOTES & DETAILS TSND-03

SHEET 145 OF 367

v:\1953\active\195300002\transportation\drawing\contract_1\plot files\zd307cltsnd.ptf