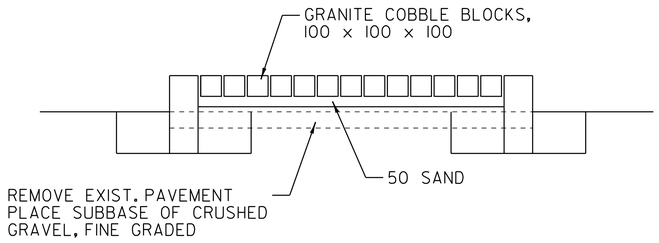

SECTION B – B

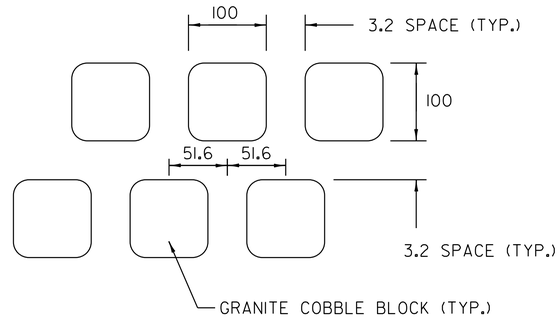

GRANITE COBBLE PATTERN

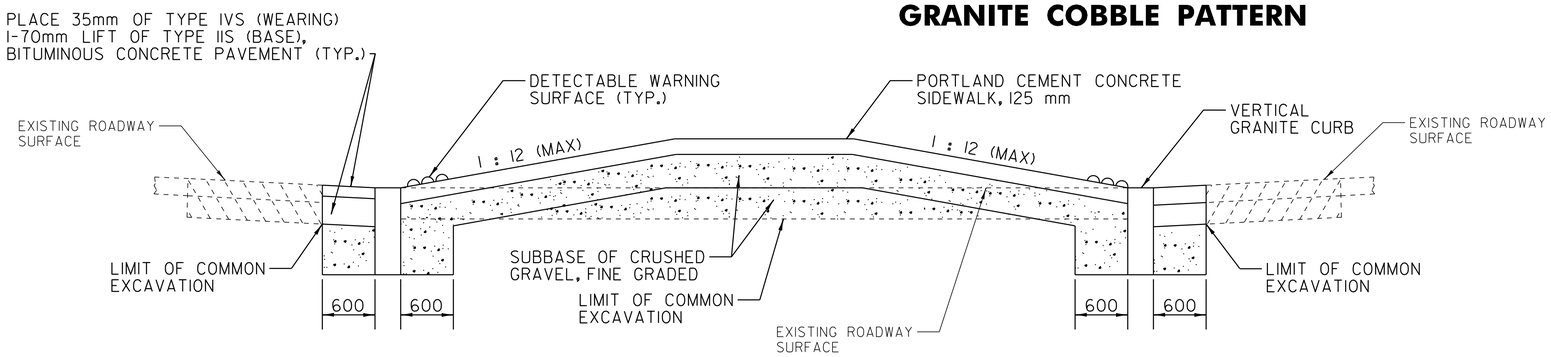

SECTION A – A

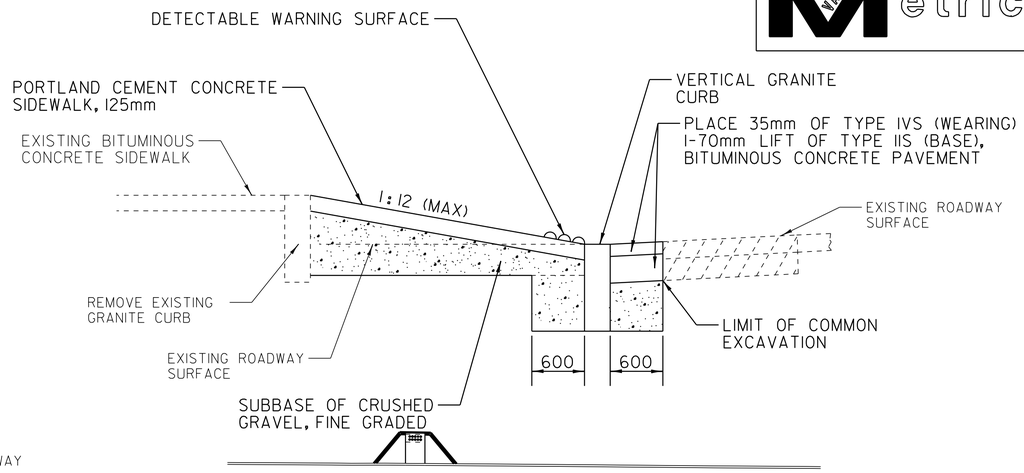

SECTION C – C

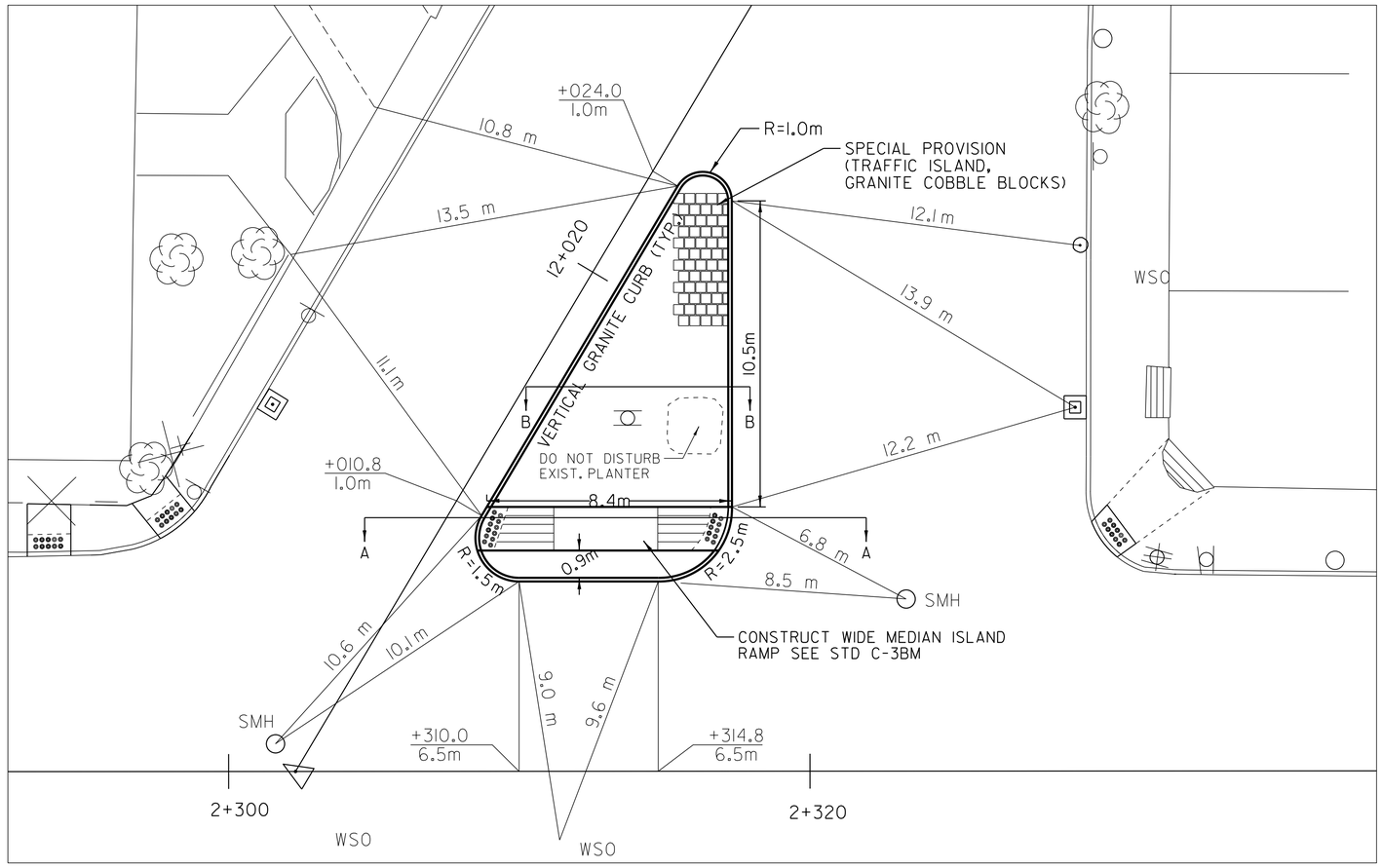

TRAFFIC ISLAND, GRANITE COBBLE BLOCKS

NOT TO SCALE
LOCATION
VT RTE 12 STA 12+009 TO 12+025 RT

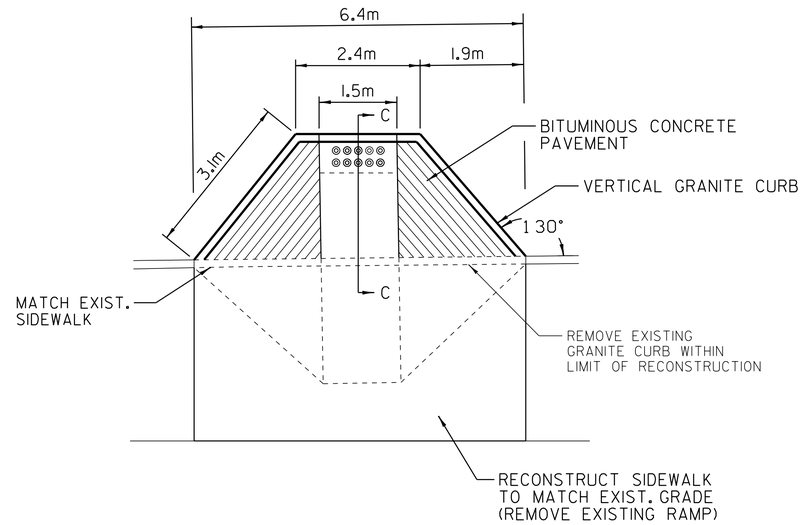

BULB–OUT DETAIL

NOT TO SCALE

LOCATION

US RTE 4 STA 2+330 RT
STA 2+436 LT

NOTE: ALL DIMENSIONS IN MILLIMETERS EXCEPT AS INDICATED

COMPOSITE ISLAND & BULBOUT DETAILS	PROJECT NAME: WOODSTOCK
	PROJECT NUMBER: NH 2606(I)S / STP 2509(I)S
DESIGN FILE NAME:/pave/06b036/pb036.dgn	PLOT DATE: 11-JUN-2012 16:15
IPARM FILE NAME: pb036dt02.i	DRAWN BY: MRS
PROJECT LEADER: PTS	CHECKED BY:NLL
DESIGNED BY: NLL	SHEET 9 OF 73