ABM INFO		SHIP	BILL OF MATERIAL					JOB NO.	DRAWING NO.	REV.
								406-1	10	
PAGE	LINE	MARK	QTY	MARK	MATERIAL	LENGTH FT	LENGTH INCHES	REMARKS	WT	PROCUREMENT NOTES
		10G3B	1		GIRDER				10881	
1	G		1	wa	PL $\frac{1}{2}$x34"	58	$6\frac{3}{8}$	M270-50WT2 (H2-3)		
1	A		1	ta	PL $1\frac{1}{8}$x16"	58	$6\frac{3}{8}$	M270-50WT2 (H2-3)		
1	A		1	ba	PL $1\frac{1}{8}$x16"	58	$5\frac{5}{8}$	M270-50WT2 (H2-3)		
2	G		2	x2a	PL $\frac{7}{8}$x$7\frac{1}{2}$"	2	10	MIE BEV		
2	H		3	x2n	PL $\frac{1}{2}$x7"	2	10			
2	H		3	x2p	PL $\frac{1}{2}$x7"	2	10			

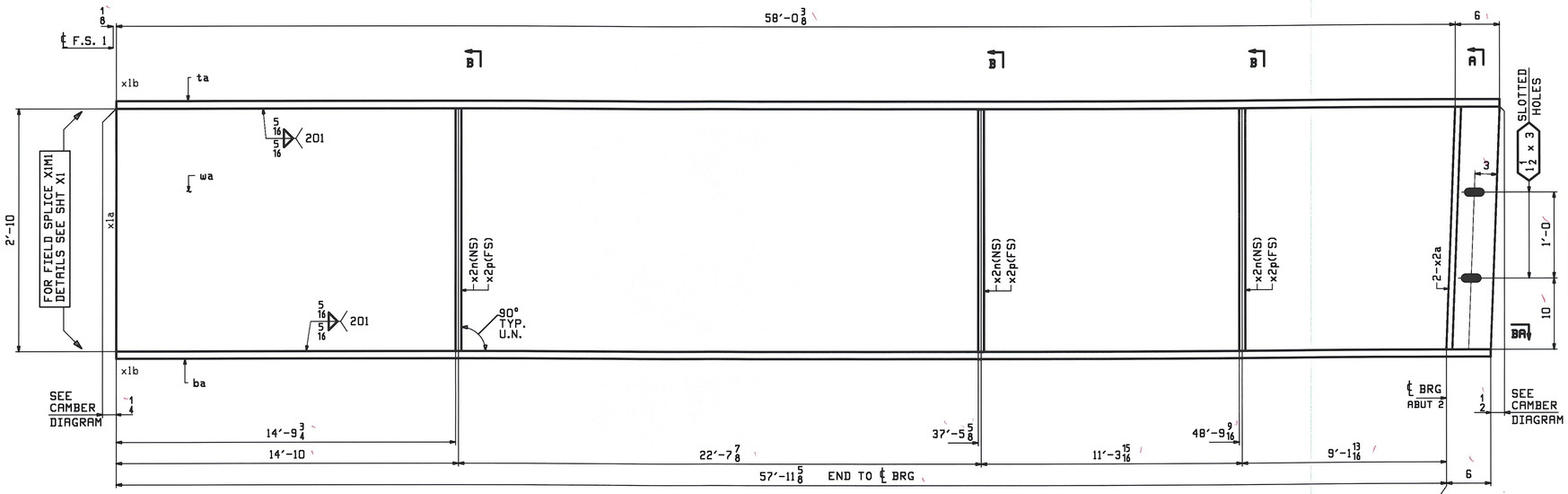

ONE - GIRDER - 10G3B

FOR FIELD SPLICE & STANDARD DETAILS SEE X SHEETS
FOR CAMBER & FLANGE DIAGRAM SEE SHEET C2
FOR GENERAL NOTES SEE SHEET GN1

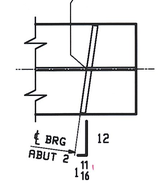

SECTION BA

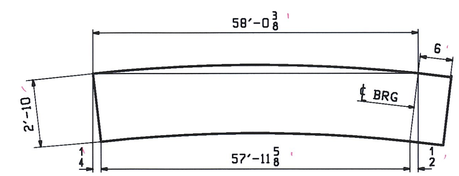

ORIENTATION DIAGRAM

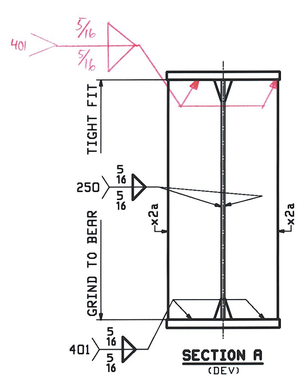

SECTION A
(DEV)

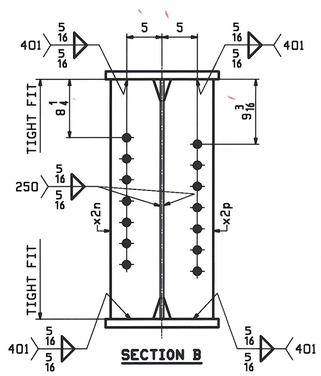

SECTION B

REV.	DATE	REMARKS	DWN	CHK	APVL	SHOP
0						

MATERIAL:	SURFACE PREP. & PAINT:	HOLES:	SHOP BOLTS:
M270-50W (UN)	SEE GN1	$\frac{15}{16}$"Ø U.N.	NONE

DESCRIPTION: GIRDER - 10G3B

CASCO BAY STEEL STRUCTURES, INC.
75 SPRING HILL ROAD SACO, MAINE 04072
PHONE (207) 282-7360 FAX. (207) 282-1179
TENSOR 2879

RECEIVED
CK'D BY DRP OK'D BY CWE
JUN 26 2009
RESUBMIT ____ APPROVED AS NOTED
BY CWE DATE 7-13-09

STRUCTURE: VT 11 OVER BLACK RIVER BRIDGE NO. 64 SPRINGFIELD, VERMONT COUNTY OF WINDSOR	DRAWN: WJF	DATE: 06/12	
	CHK'D: DO	DATE: 06/23	
LOCATION: TOWN OF SPRINGFIELD	JOB NO.	DWG NO.	
PROJ NO. BHF 016-2(14)	406-1	10	
CUSTOMER: COLD RIVER BRIDGES, LLC		REV. △	

Thu, Jun 25, 2009 03:04:58 PM /users/jobs/2879-10 : Rev0