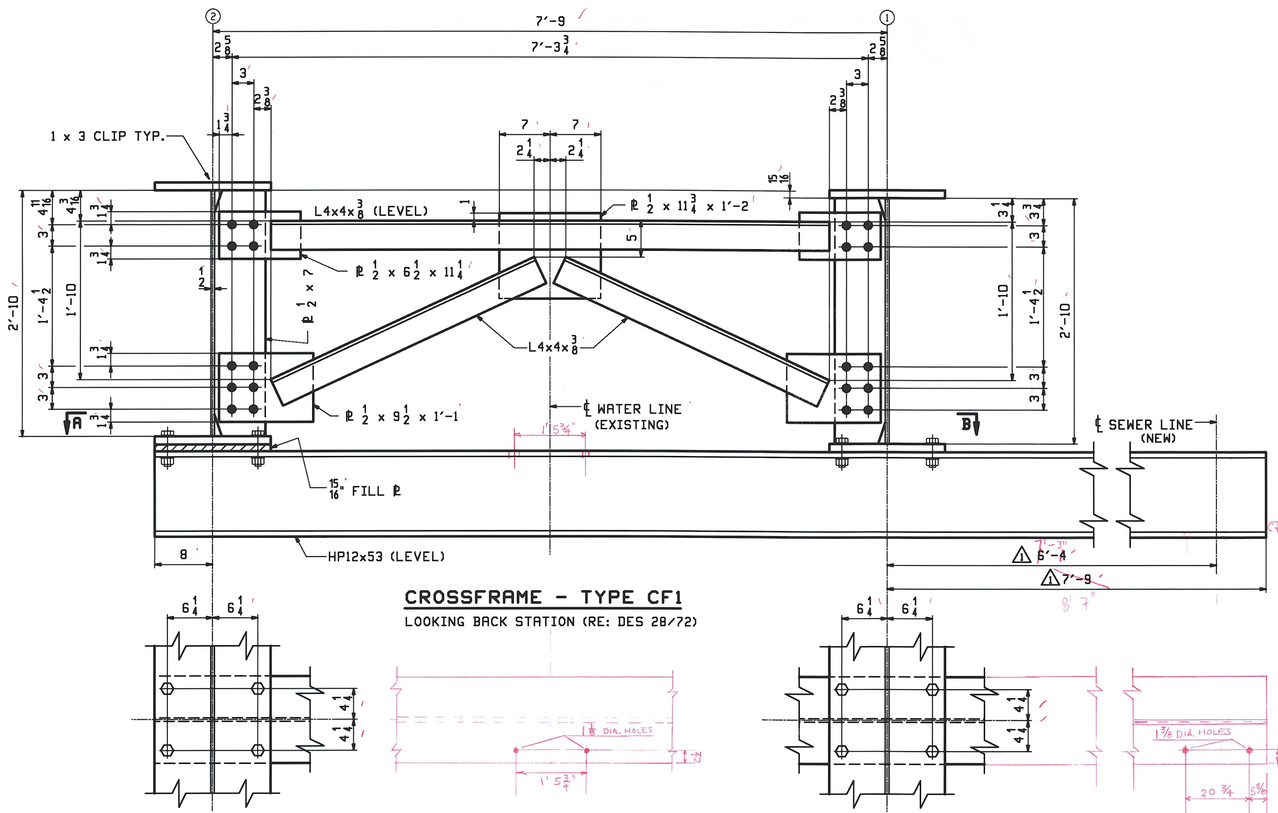

CROSSFRAME - TYPE CF1

LOOKING BACK STATION (RE: DES 28/72)

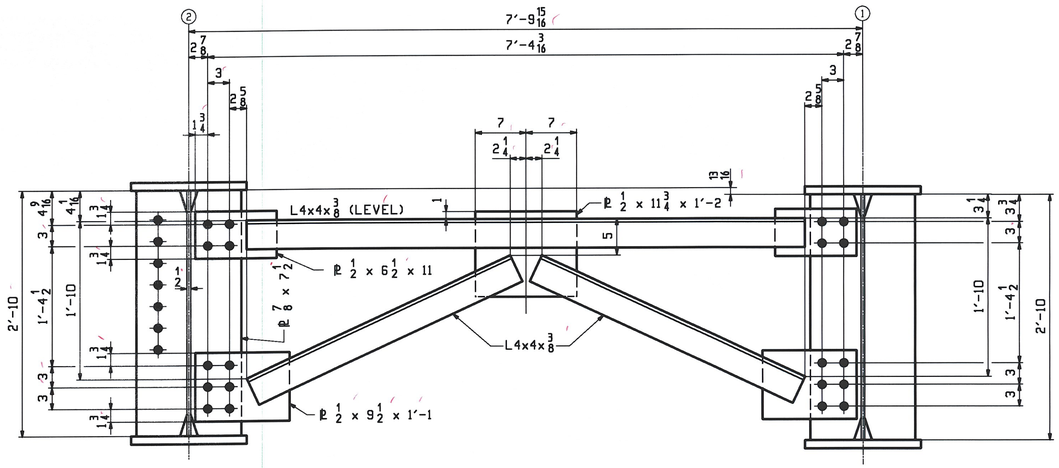

PIER CROSSFRAME - TYPE CF2

LOOKING BACK STATION (RE: DES 28/72)

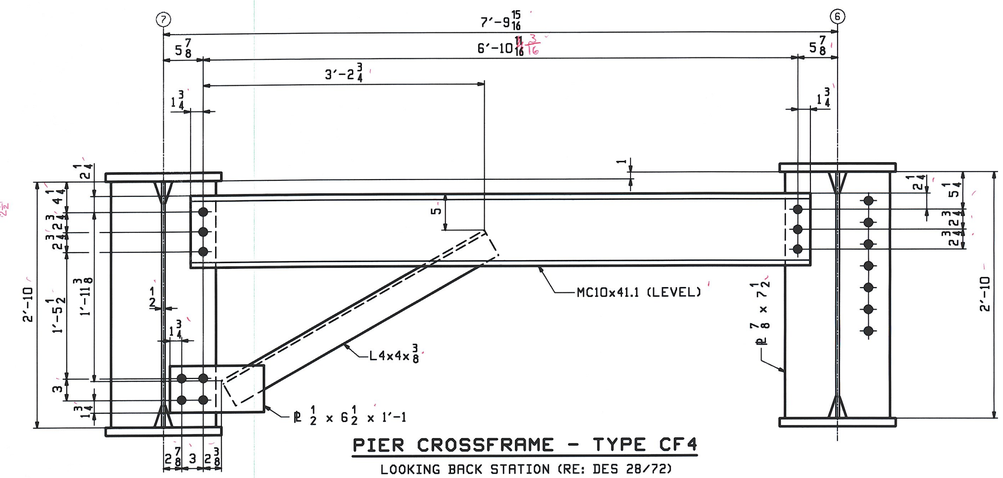

PIER CROSSFRAME - TYPE CF4

LOOKING BACK STATION (RE: DES 28/72)

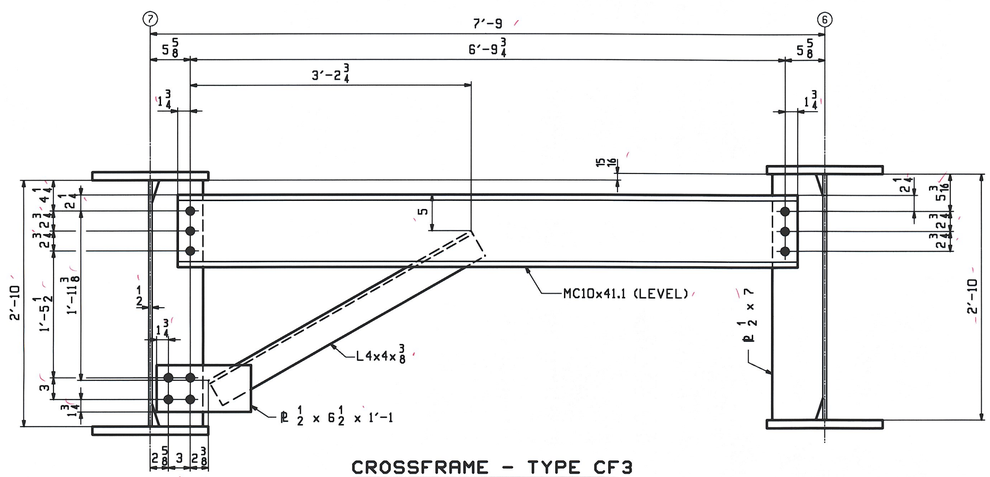

CROSSFRAME - TYPE CF3

LOOKING BACK STATION (RE: DES 28/72)

RECEIVED
CK'D BY DRF CK'D BY WDL
JUN 24 2009
RESUBMIT ____ APPROVED AS NOTED
BY CWC DATE 7-13-09

**** NOTE ****
THE PURPOSE OF THIS DRAWING IS TO COORDINATE GEOMETRIC CONTROL INFORMATION AND CONNECTION SPACING. THIS DWG IS SUBMITTED FOR INFORMATION ONLY & IS NOT INTENDED FOR SHOP FABRICATION. DETAIL DWGS WILL SHOW ALL WELDING AND DIMENSIONS REQ'D FOR FABRICATION.

REV.	DATE	REMARKS	DWN	CHK	APVL	SHOP
1	6/18	REV. SEWER LOC. & HP LENGTH	RLA	WJF		
0						

MATERIAL:	SURFACE PREP. & PAINT:	HOLES:	SHOP BOLTS:
M270-50W	SEE GN1	15/16"ø	(FIELD) 7/8"ø

DESCRIPTION: LAYOUTS

CASCO BAY STEEL STRUCTURES, INC.
75 SPRING HILL ROAD SACO, MAINE 04072
PHONE (207) 282-7360 FAX. (207) 282-1179
TENSOR 28/9

STRUCTURE: VT 11 OVER BLACK RIVER BRIDGE NO. 64 SPRINGFIELD, VERMONT COUNTY OF WINDSOR		DRAWN: WJF	DATE: 06/09
		CHKD: RLA	DATE: 06/15
LOCATION: TOWN OF SPRINGFIELD		JOB NO.	DWG NO.
PROJ NO. BHF 016-2(14)		406-1	TD1
CUSTOMER: COLD RIVER BRIDGES, LLC			REV. 1

RLA Thu Jun 18, 2009 03:03:13 PM /users/jobs/2879/TD1.Rev1