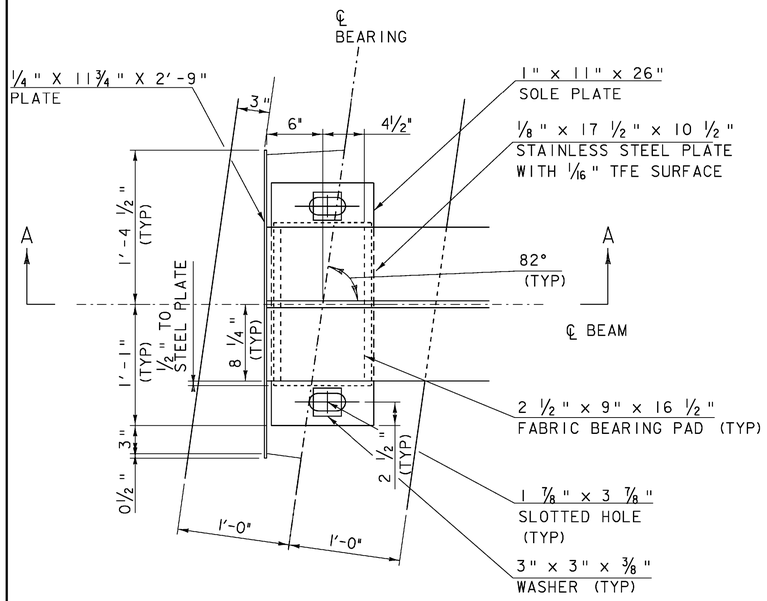


EXPANSION BEARING
BEAMS 2 THROUGH 9
ABUTMENT 1
SCALE 1 1/2" = 1'-0"

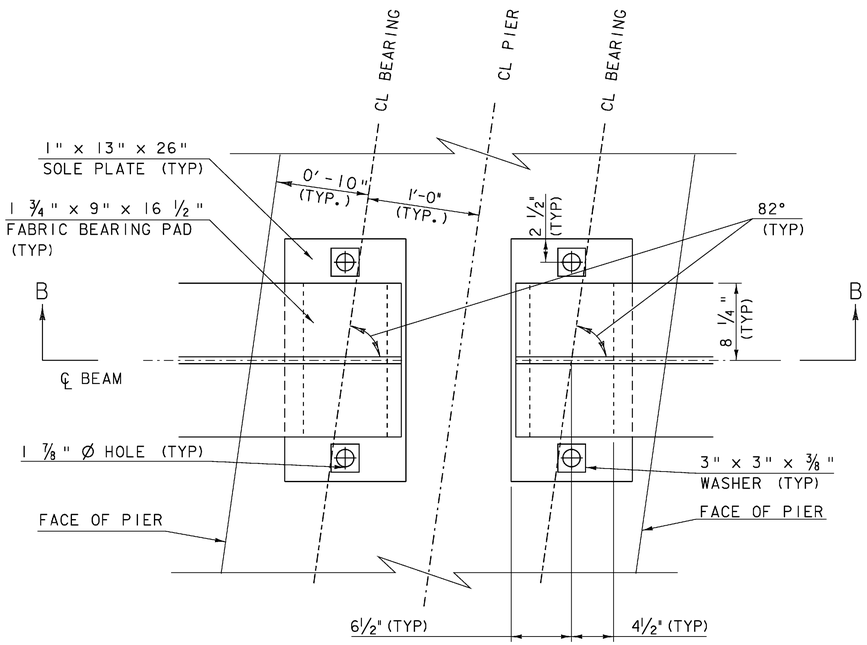


FIXED BEARING
PIER 1 BEAMS 2 THROUGH 9
PIER 2 BEAMS 12 THROUGH 19
SCALE 1 1/2" = 1'-0"

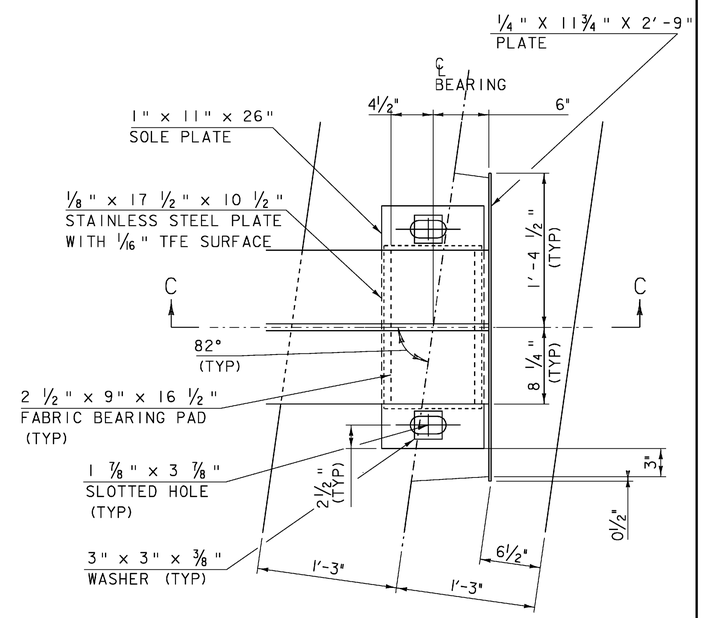


EXPANSION BEARING
BEAMS 12 THROUGH 19
ABUTMENT 2
SCALE 1 1/2" = 1'-0"

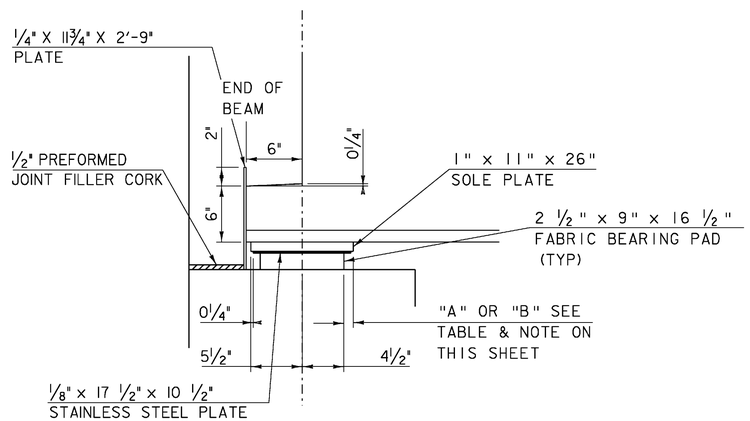


SECTION A-A
SCALE 1 1/2" = 1'-0"

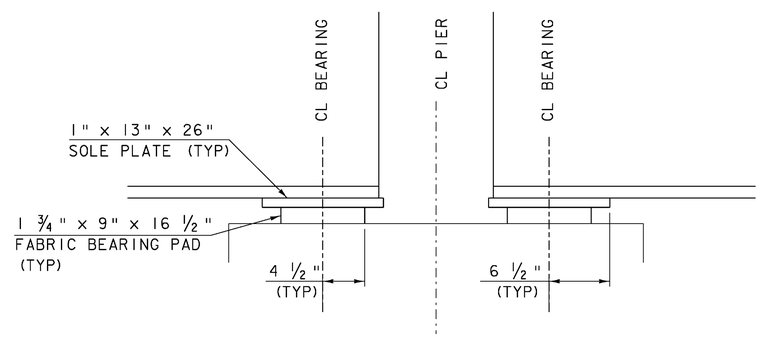


SECTION B-B
SCALE 1 1/2" = 1'-0"

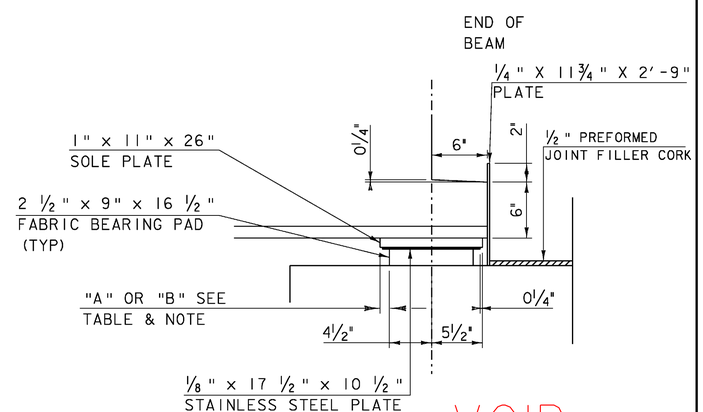


SECTION C-C
SCALE 1 1/2" = 1'-0"

VOID
SEE REVISED SHEET

SCALE 1 1/2" = 1'-0"
1 9 6 3 0 1

| BEAMS 2 - 9 & 12 - 19 TEMPERATURE | "A" | "B" |
|---|---|---|
| 0 | 1 5/8" | 1 3/8" |
| 15 | 1 1/2" | 1 1/4" |
| 30 | 1 3/8" | 1 1/8" |
| 45 | 1 1/4" | 1" |
| 60 | 1 1/8" | 7/8" |
| 75 | 1" | 3/4" |
| 90 | 7/8" | 5/8" |
| 105 | 3/4" | 1/2" |

NOTE:
THE "A" DISTANCE IS THE SOLE PLATE ADJUSTMENT TO BE USED BEFORE DEAD LOAD IS ADDED TO THE GIRDERS. THE "B" DISTANCE IS THE SOLE PLATE ADJUSTMENT TO BE USED AFTER THE DECK AND SIDEWALK HAVE BEEN POURED. THE DIFFERENCE IS THE THEORETICAL ELONGATION OF THE BOTTOM FLANGE DUE TO THE DEAD LOAD DEFLECTION FROM THE DECK AND SIDEWALK. THE FINAL "B" DISTANCE MUST BE REACHED WITHIN 1/8".

PROJECT NAME: SPRINGFIELD
PROJECT NUMBER: BHF 016-2(14)

FILE NAME: s06j004sup.dgn
PROJECT LEADER: R. WHITCOMB
DESIGNED BY: C. CARLSON
INTERIOR BEARING DETAILS

PLOT DATE: 04-MAR-2009
DRAWN BY: C. MOONEY
CHECKED BY: D. PETERSON
SHEET 32 OF 72