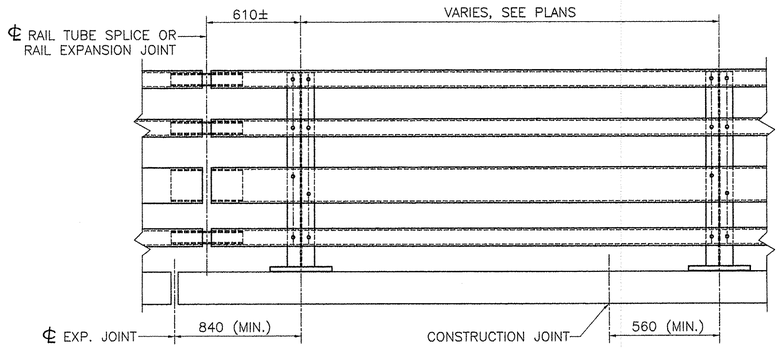

BRIDGE RAILING ELEVATION

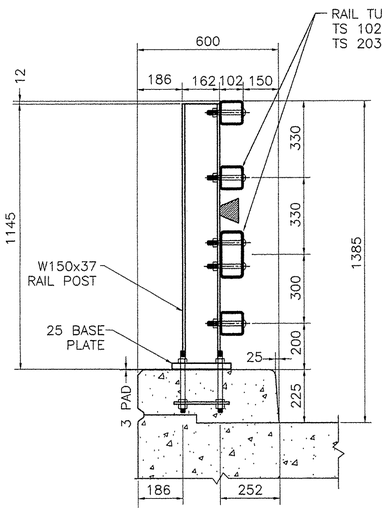

TYPICAL SECTION
4 RAIL POST (4P)

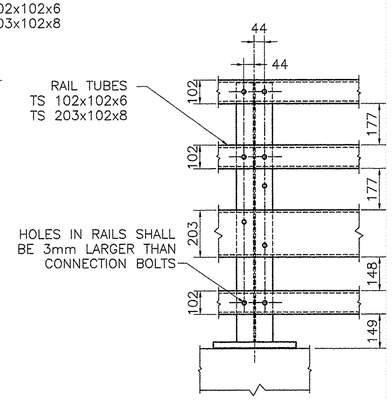

ELEVATION

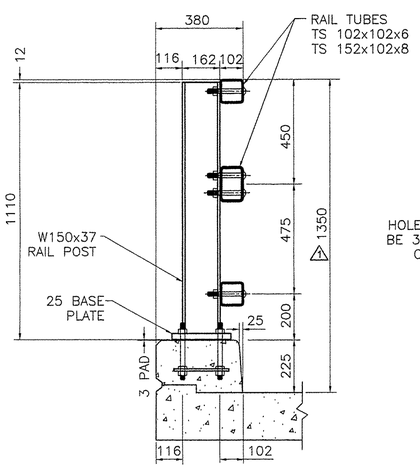

TYPICAL SECTION
3 RAIL POST (3P)

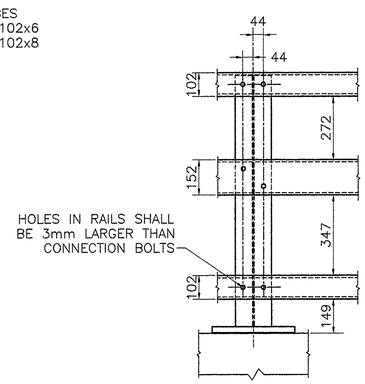

ELEVATION

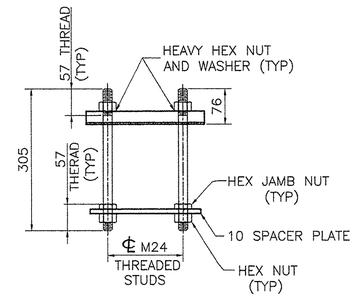

RAIL POST ANCHORAGE
(BY OTHERS)

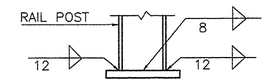

BASE WELD DETAIL

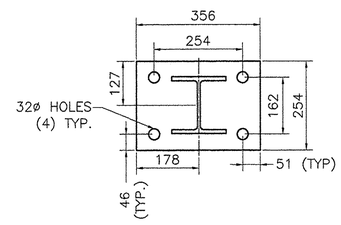

POST AND BASE PLATE

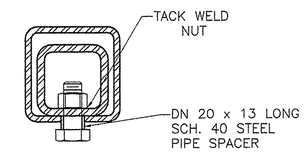

16ø TAPPED HOLE IN SPLICE TUBE
AND 29 x 'C' SLOT IN RAIL TUBE FOR
M16 BOLT AND PLAIN HARDENED WASHER

EXPANSION JOINT SECTION

FOR DETAILS NOT SHOWN,
SEE "RAIL TUBE SPLICE SECTION."

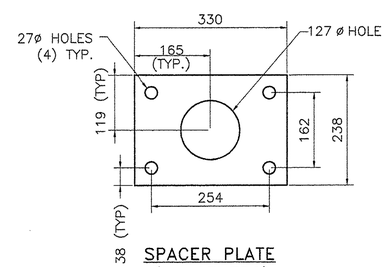

SPACER PLATE
(BY OTHERS)

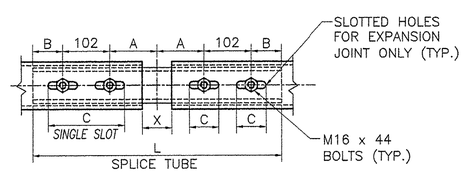

RAIL TUBE SPLICE AND RAIL
EXPANSION JOINT DETAIL

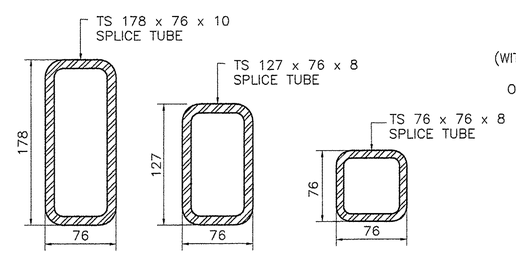

RAIL TUBE SPLICE SECTION

SPLICE TABLE					
T	A	B	C	L	X
N/A	102	50	--	510	20
EXPANSION JOINT TABLE					
70	140	60	90	600	102

T = TOTAL MOVEMENT BETWEEN BRIDGE
EXPANSION JOINTS. SEE NOTE 6

NOTES:

1. ALL RAILINGS AND MATERIALS SHALL CONFORM TO THE PROVISION OF SECTION 525, "RAILINGS OF THE STANDARD SPECIFICATION FOR CONSTRUCTION".

2. TUBING AND POSTS SHALL MEET THE REQUIREMENTS OF SECTION 732, "RAILING MATERIALS OR THE STANDARD SPECIFICATIONS FOR CONSTRUCTION," EXCEPT THAT THE DROP-WEIGHT TEAR TEST IN SECTION 732 SHALL NOT APPLY TO THE STRUCTURAL TUBING SHOWN ON THIS SHEET.

3. PRIOR TO GALVANIZING, ALL EXPOSED CUT OR SHEARED EDGES SHALL BE ROUNDED TO A 2mm RADIUS AND BE FREE OF BURRS.

4. RAIL POSTS SHALL BE SET NORMAL TO GRADE.

5. SECTIONS OF RAIL TUBE SHALL BE ATTACHED TO A MINIMUM OF TWO (2) RAIL POSTS AND PREFERABLY TO AT LEAST FOUR (4) POSTS.

6. RAIL TUBE EXPANSION JOINT SHALL BE PROVIDED IN ANY RAIL BAY SPANNING A SUPERSTRUCTURE EXPANSION JOINT. EXPANSION JOINT WIDTH SHALL BE "X" AT 7°C AND WILL BE ADJUSTED IN THE FIELD BY THE ENGINEER FOR OTHER TEMPERATURES.

7. ALL PARTS SHALL BE GALVANIZED AFTER FABRICATION IN ACCORDANCE WITH AASHTO M111M, EXCEPT HARDWARE, WHICH SHALL MEET THE REQUIREMENTS OF AASHTO M232M.

8. RAIL POST ANCHORING NUTS SHALL BE TIGHTENED TO A SNUG FIT AND GIVEN AN ADDITIONAL ONE-EIGHTH TURN.

9. RAIL TUBES SHALL BE ATTACHED USING M20 FULL DIAMETER BODY AASHTO M164M (TYPE 1) ROUND HEAD BOLT INSERTED THOUGH THE FACE OF THE TUBE. HOLES IN POSTS SHALL BE 2mm LARGER THAN THE BOLT SIZE.

10. HOLES IN RAILS FOR RAIL TUBE ATTACHMENT MAY BE FIELD-DRILLED. HOLES SHALL BE COATED WITH AN APPROVED ZINC-RICH PAINT PRIOR TO ERECTION.

11. IF THERE IS A CONFLICT BETWEEN THE DETAILS SHOWN ON THIS SHEET AND THE DESIGN, THE REQUIREMENTS OF THE DESIGN DRAWINGS SHALL BE FOLLOWED.

12. ANY BENDING OF RAIL SHALL BE BY SHOP PROCEDURE ONLY.

13. THE FABICATOR SHALL SUBMIT SHOP DRAWINGS, INCLUDING WELDING PROCEDURES TO THE STRUCTURES SECTION FOR APPROVAL IN ACCORDANCE WITH THE PROVISION OF 506.04, SHOP DRAWINGS. ALL WELDING SHALL CONFORM WITH SECTION 506.10.

14. RAIL POSTS AND BASE PLATES SHALL BE TESTED FOR IMPACT PROPERTIES IN ACCORDANCE WITH ASTM A370 CHARPY IMPACT TESTING USING TYPE A SPECIMENS.

15. TO FACILITATE FIELD FIT – UP OF THE TRANSITION RAILING, POSTS SHALL BE SET LOOSELY INTO FIBER FORM TUBES WHILE TRANSITION PARTS ARE BEING ASSEMBLED. POST HOLES SHALL BE BACKED FILLED WITH A CONCRETE MIX APPROVED BY THE ENGINEER. PAYMENT FOR COMPONENTS, INCLUDING BACKUP PLATE AND END TERMINAL CONNECTOR FOR GUARD RAIL, AUGERING, FIBER FORM TUBES AND CONCRETE , AND INSTALLATION SHALL BE CONSIDERED INCIDENTAL TO ITEM 525.33, "BRIDGE RAILING – NETC 2 RAILING".

16. ALL APPROACH RAIL SPLICES SHALL BE LAPPED ON THE DIRECTION OF TRAFFIC FLOW.

MATERIALS
RAIL TUBES.....ASTM A500, GRADE B OR ASTM A501
RAIL POSTS AND BASE PLATES.....ASTM A709/A709M, GRADE 50
ALL OTHER SHAPEs AND PLATES.....ASTM A709/A709M, GRADE 36
ANCHOR STUDS.....ASTM A449
ALL OTHER BOLTS (UNLESS NOTED).....AASHTO M164M, TYPE1

NUTS FOR AASHTO M164M (ASTM A325M) BOLTS AND ANCHOR STUDS SHALL COMPLY WITH AASTHO M291M (ASTM A563M).

WASHERS SHALL COMPLY WITH AASHTO M293M (ASTM F436M) SPECIFCATIONS.

3mm PAD SHALL COMPLY WITH STANDARD SPECIFICATION SUBSECTION 731.01 OR 731.02.

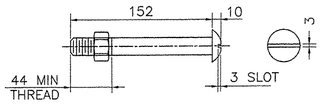

M20 DIA. M164M (TYPE 1)
ROUND HEAD BOLT
(WITH WASHER AND PREVAILING TORQUE TYPE LOCK NUT)
(SEE NOTE #9)
ONLY FULL DIAMETER BODY BOLTS WILL BE ALLOWED.

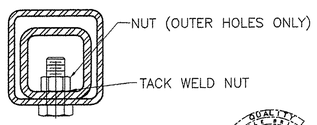

16ø TAPPED HOLE IN SPLICE TUBE &
19 ø HOLE IN RAIL TUBE FOR M16
BOLT & PLAIN HARDENED WASHER

RECEIVED
JUN 27 2008
G.P.I.

REVISIONS		
No.	Remarks	Date
0	Initial submittal	2/15/08
1	3-Rail cross section	3/18/08
2	Added Splice Tube	6/5/08

CHOP DRAWINGS ARE REVIEWED UNLESS OTHERWISE NOTED
NO EXCEPTION TAKEN
REVISE AS NOTED
RESUBMISSION NOT REQUIRED
REVISE & RESUBMIT
RESUBMISSION REQUIRED
REJECTED
DATE 6/24/08
SIGNATURE 726
STAMP BY SIGNATURE IS FOR THE SOLE PURPOSE OF ASCERTAINING GENERAL CONFORMITY WITH DESIGN INTENT. IT DOES NOT INDICATE REVIEW OF DIMENSIONS, FABRICATION AND CONSTRUCTION METHODS, PROCESSES, PROCEDURES, SAFETY PRECAUTIONS AND CONSTRUCTION SITE. THE REVIEW OF COMPONENTS AND ERRORS OR OMISSIONS ON SHOP DRAWINGS

HIGHWAY SAFETY CORP.
GLASTONBURY, CT

BRIDGE RAILING – 3 & 4 RAIL
TOWN OF BENNINGTON
COUNTY OF BENNINGTON
PROJECT AC NH 019-1(53) BRIDGE B11
EAST ROAD OVER VT ROUTE 279

DRAWN	MHM
CHECKED	P. Radice
DATE	12/30/07
SCALE	N.T.S.
HSC REFERENCE NO.	1615
SIZE	D
REVISION	2
SHEET NO.	10 of 11

GENERAL CONTRACTOR
SUB CONTRACTOR F.R. LAFAYETTE, INC.