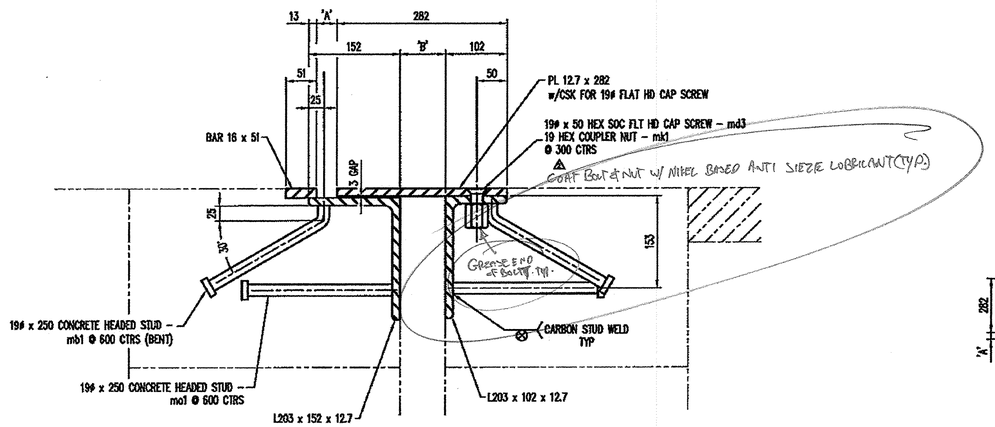

STANDARD SECTION VIEW: A–A

REFER TO JOINT OPENING TABLE FOR DIMENSIONS 'A' and/or 'B'

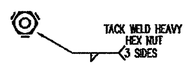

HEX NUT WELD DETAIL

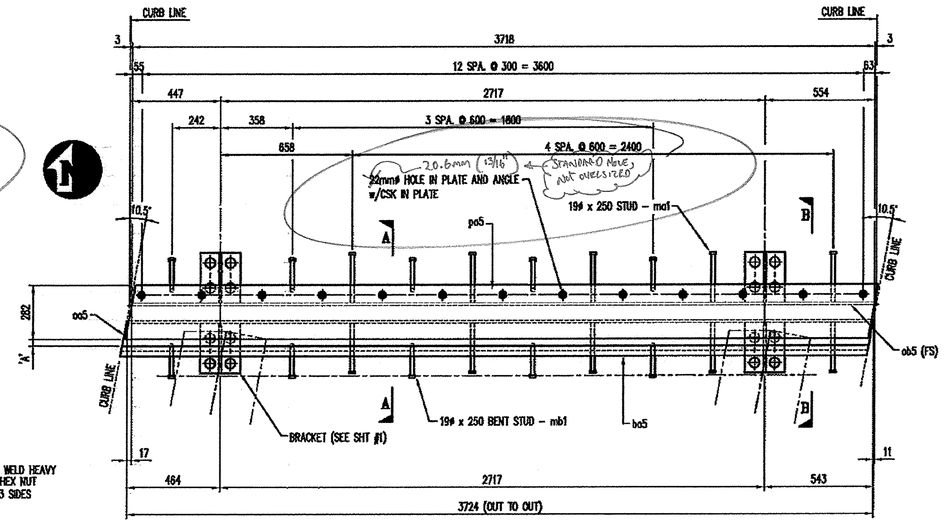

ONE – EXPANSION JOINT – 5EJ1

SHARED PATH @ ABUTMENT #2

JOINT OPENING		
TEMP	'A'	'B'
–20° C.	59	100
–10° C.	50	91
0° C.	42	83
10° C.	34	75
20° C.	25	66
30° C.	17	58
40° C.	8	49

SHOP NOTES:

1. WORK THIS SHEET ALONG WITH STANDARD SHEET #1 AND CURB PLATE ASSEMBLY SHEETS.
2. COATS ALL BOLTS AND FERRULE INSERTS WITH NEVER SEIZE GREASE PRIOR TO ASSEMBLY.
3. WRENCH TIGHTEN BOLTS AFTER ASSEMBLY OF THE EXPANSION JOINT.
4. SEAL ALL ACCESSIBLE JOINTS PRIOR TO GALVANIZING.

CONTRACTOR NOTES:

1. ADJUST JOINT OPENING TO PROPER DIMENSION PRIOR TO FIELD WELDING OF THR'D RODS.

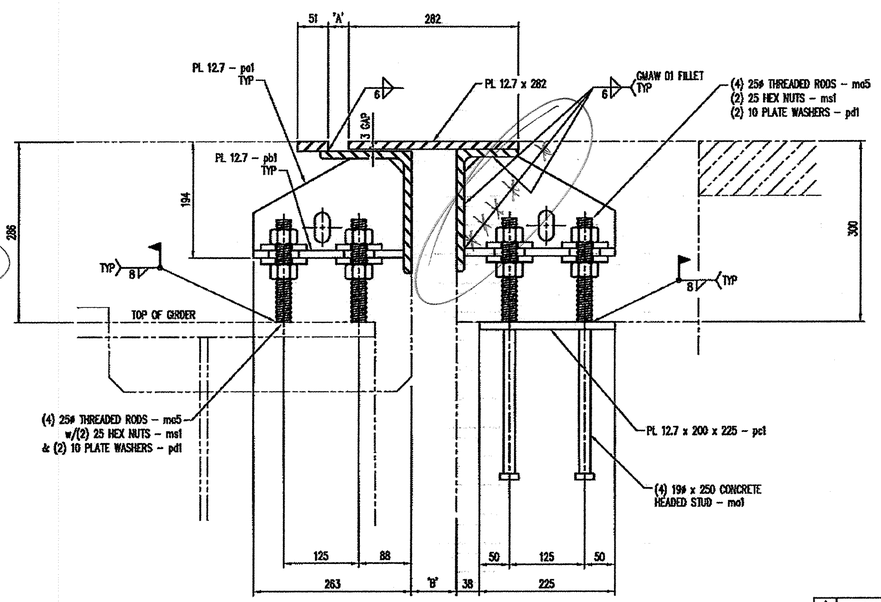

GIRDER SECTION VIEW: B–B

BILL OF MATERIALS

#	MARK No.	QTY	DESCRIPTION	MATERIAL	REMARKS
1			ONE – EXPANSION JOINT – 5EJ1		HDG
2					
3	ma1	18	19ø x 250 CONCRETE HEADED STUD	A108	
4	mb1	10	19ø x 250 CONCRETE HEADED STUD	A108	BENT
5	mk1	13	19ø HEX COUPLER NUT	ZP	F-42
6	ms1	32	25 HEAVY HEX NUT	A563	HDG
7	mh2	ONE	ANTI SEIZE GREASE	–	
8	md3	13	19ø x 50 HEX SOCKET FLAT HEAD CAP SCREW	~~A325~~ 835-93	M/D
9	ma5	16	25ø x 180 THREADED ROD	A36	HDG
10					
11	pa1	4	PL 12.7 x 152 x 250	A36	
12	pb1	4	PL 12.7 x 200 x 250	A36	
13	pc1	2	PL 12.7 x 200 x 225	A36	
14	pd1	32	PL 10 x 76 x 76	A36	HDG
15	po5	ONE	PL 12.7 x 282 x 3768	A36	
16					
17	oo5	ONE	L203 x 152 x 12.7 x 3752	A36	
18	ob5	ONE	L203 x 102 x 12.7 x 3737	A36	
19					
20	bo5	ONE	BAR 16 x 50 x 3733	A36	
21					
22					
23					
24					
25					
26					
27					
28					
29					
30					
31					

SHOP DRAWINGS ARE REVIEWED UNLESS NOTED OTHERWISE

NO EXCEPTION TAKEN		
REVISE AS NOTED RESUBMISSION NOT REQUIRED	X	Stantec
REVISE AS NOTED RESUBMISSION REQUIRED		
REJECTED		

DATE 4/28/08

SIGNATURE Jzk

REVIEW BY STANTEC IS FOR THE SOLE PURPOSE OF ASCERTAINING GENERAL CONFORMITY WITH DESIGN. CONTRACTOR IS RESPONSIBLE FOR DIMENSIONS, FABRICATION AND CONSTRUCTION METHODS, COORDINATION OF SUB-TRADES, DETAIL DESIGN OF COMPONENTS, AND ERRORS OR OMISSIONS ON SHOP DRAWINGS.

No.	Description	Date	By	Approved
2	DELETE PLASTIC CAP	4/23/08	SB	
1	APPROVAL CHANGES	4/16/08	SB	

REVISIONS

Niagara Bridge and Rail
4817 Hewy Avenue, Niagara Falls, N.Y. 14304
Phone: (716) 283-6710 Fax: (716) 283-5137

Project Information:
STATE: VERMONT
COUNTY: -
CITY / TOWNSHIP: BENNINGTON
LOCATION: EAST RD. OVER VT ROUTE 279
PROJECT NO.: AC NH 019-1(33)
OWNER: VT-AOT
CONTRACTOR: -

Drawn By:	Date:	Checked By:	Date:
JLB	3/17/08	TPW	3/24/08

Description: VERMONT – EXPANSION JOINT DETAIL SHARED PATH @ ABUT. #2 JOINT DETAIL

Sheet No.: 5 of TBD
Drawing No.: 10063-01
Scale: NONE
Rev No.: –

RECEIVED
MAY 05 2008
G.P.I.