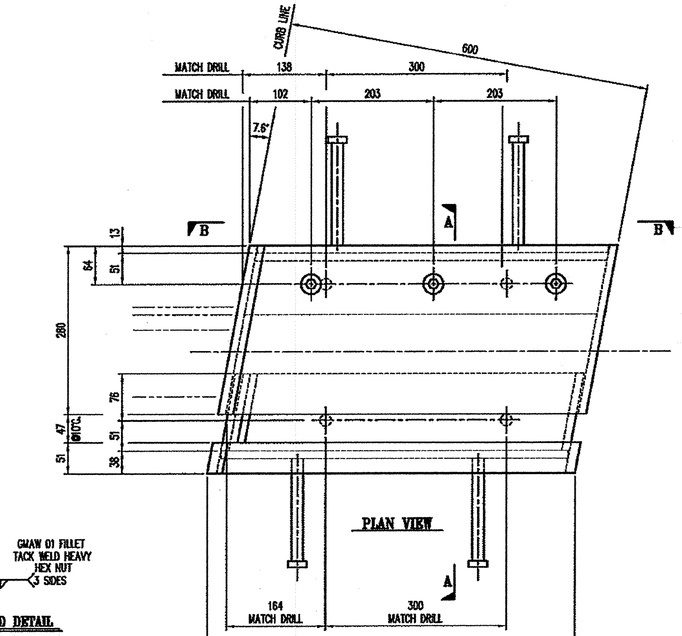


PLAN VIEW

HEX NUT WELD DETAIL

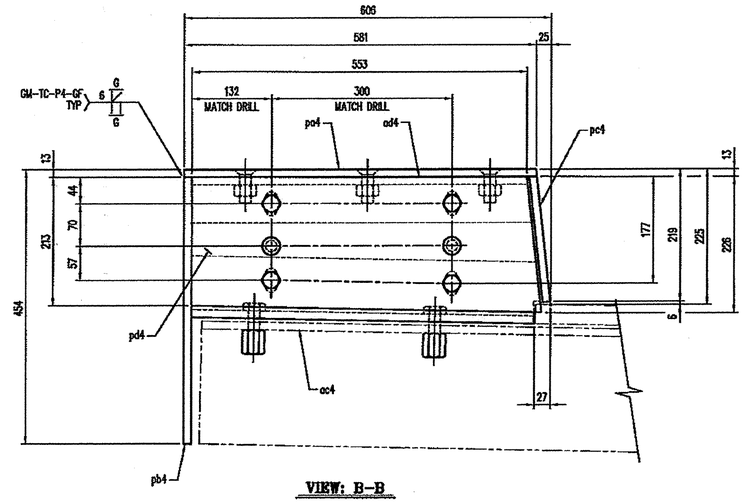


VIEW: B-B

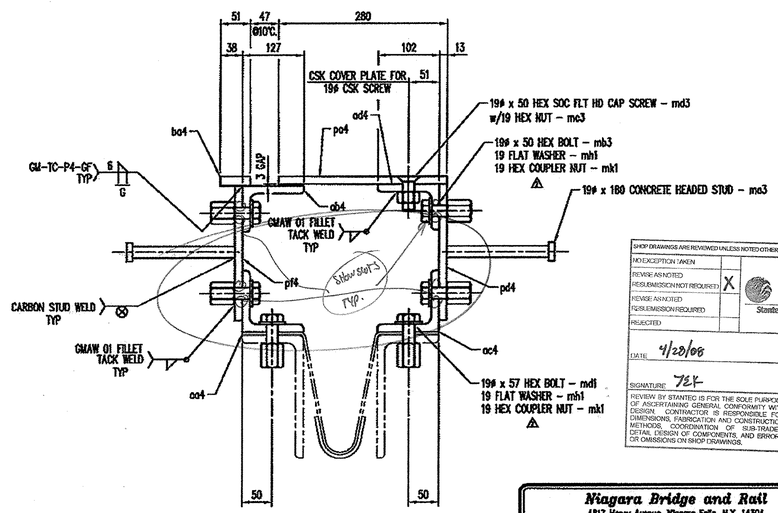


SECTION: A-A

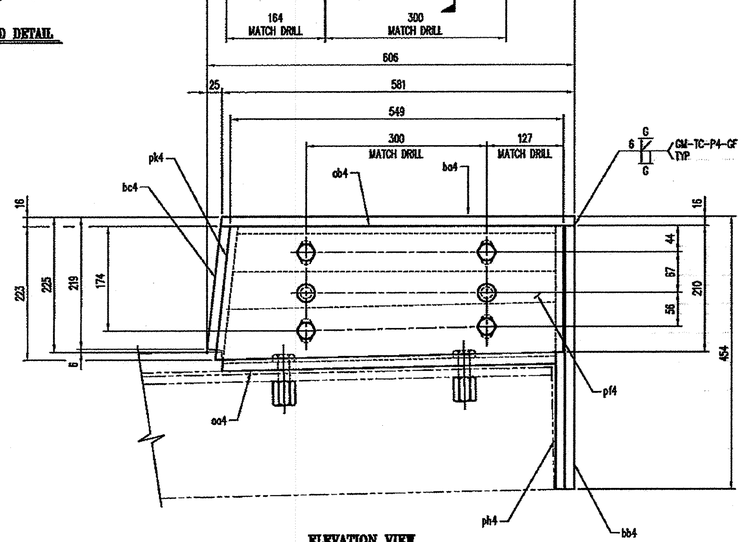


ELEVATION VIEW

REFER TO SHEET #6 FOR SUPPORT ANGLE DETAILS

## BILL OF MATERIALS △

| # | MARK No. | QTY | DESCRIPTION | MATERIAL | REMARKS |
|---|---|---|---|---|---|
| 1 | | | ONE – CURB ASSEMBLY – 5CA1 | | HDG |
| 2 | | | | | |
| 3 | md1 | 4 | 19ø x 57 HEX BOLT | A325 | M/G |
| 4 | mh1 | 12 | 19 FLAT WASHER | F436 | M/G |
| 5 | mk1 | 12 | 19 HEX COUPLER NUT | A563 | M/G |
| 6 | | | | | |
| 7 | | | | | |
| 8 | mc3 | 4 | 19ø x 180 CONCRETE HEADED STUD | A108 | |
| 9 | mb3 | 8 | 19 x 50 HEX BOLT | A325 | M/G |
| 10 | mc3 | 3 | 19 HEX NUT | A563 | M/G |
| 11 | md3 | 3 | 19ø x 50 HEX SOCKET FLAT HEAD CAP SCREW | F835-93 | M/G |
| 12 | | | | | |
| 13 | po4 | ONE | PL 12.7 x 280 x 621 | A36 | |
| 14 | pb4 | ONE | PL 12.7 x 284 x 441 | A36 | |
| 15 | pc4 | ONE | PL 12.7 x 206 x 284 | A36 | |
| 16 | pd4 | ONE | PL 12.7 x 226 x 578 | A36 | |
| 17 | pf4 | ONE | PL 12.7 x 223 x 574 | A36 | |
| 18 | ph4 | ONE | PL 12.7 x 104 x 438 | A36 | |
| 19 | pk4 | ONE | PL 12.7 x 104 x 207 | A36 | |
| 20 | | | | | |
| 21 | oa4 | ONE | L102 x 102 x 12.7 x 562 | A36 | |
| 22 | ob4 | ONE | L127 x 76 x 12.7 x 538 | A36 | |
| 23 | oc4 | ONE | L102 x 102 x 12.7 x 592 | A36 | |
| 24 | od4 | ONE | L127 x 76 x 12.7 x 590 | A36 | |
| 25 | | | | | |
| 26 | bo4 | ONE | BAR 16 x 51 x 589 | A36 | |
| 27 | bb4 | ONE | BAR 16 x 51 x 438 | A36 | |
| 28 | bc4 | ONE | BAR 16 x 51 x 205 | A36 | |
| 29 | | | | | |
| 30 | | | | | |
| 31 | | | | | |

ONE – CURB ASSEMBLY – 4CA1

HOT-DIPPED GALVANIZED

| No. | Description | Date | By | Approved |
|---|---|---|---|---|
| 2 | DELETE PLASTIC CAP | 4/23/08 | SB | |
| 1 | APPROVAL CHANGES | 4/18/08 | SB | |

REVISIONS

SHOP DRAWINGS ARE REVIEWED UNLESS NOTED OTHERWISE

NOTE/EXCEPTION TAKEN

REVISE AS NOTED RESUBMISSION NOT REQUIRED — X

REVISE AS NOTED RESUBMISSION REQUIRED

REJECTED

Stantec

DATE 4/28/08

SIGNATURE TEK

REVIEW BY STANTEC IS FOR THE SOLE PURPOSE OF ASCERTAINING GENERAL CONFORMITY WITH DESIGN. CONTRACTOR IS RESPONSIBLE FOR DIMENSIONS, FABRICATION AND CONSTRUCTION METHODS, COORDINATION OF SUB-TRADES, DETAIL DESIGN OF COMPONENTS, AND ERRORS OR OMISSIONS ON SHOP DRAWINGS.


**Niagara Bridge and Rail**
4817 Henry Avenue, Niagara Falls, N.Y. 14304
Phone: (716) 283-4710 Fax: (716) 283-3137


Project Information:
STATE: VERMONT
COUNTY: .
CITY / TOWNSHIP: BENNINGTON
LOCATION: EAST RD. OVER VT ROUTE 279
PROJECT NO.: AC NH 019-1(53)
OWNER: VT-AOT
CONTRACTOR: .

| Drawn By: | Date: | Checked By: | Date: |
|---|---|---|---|
| JJB | 3/17/08 | TFW | 3/24/08 |

Description: VERMONT – EXPANSION JOINT DETAIL CURB PLATE DETAIL

Sheet No.: 4 of TBD
Scale: NONE
Drawing No.: 10063-01
Rev No.: –


RECEIVED
MAY 05 2008
G.P.I.