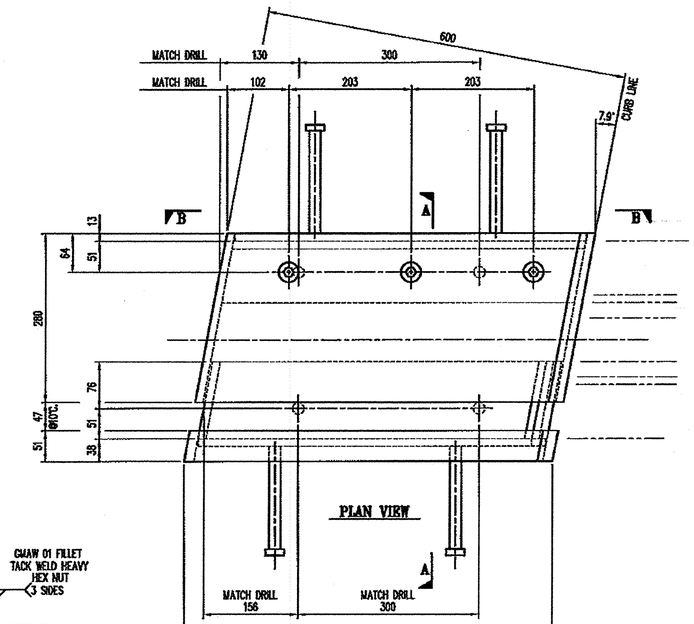

PLAN VIEW

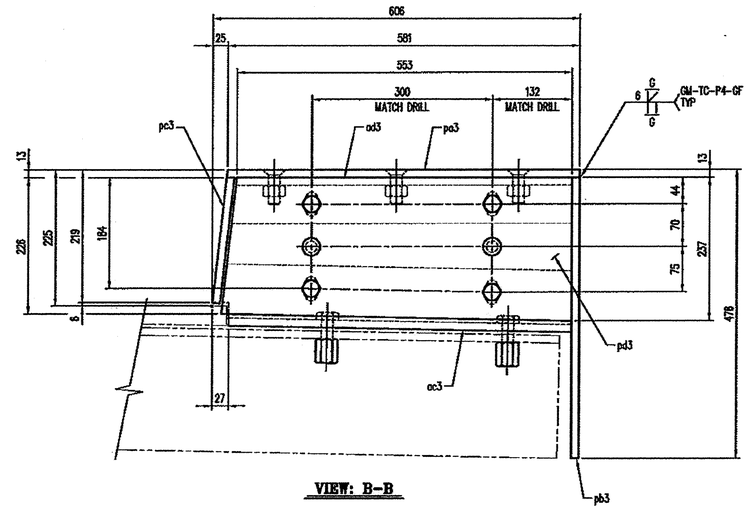

VIEW: B-B

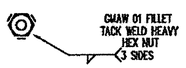

HEX NUT WELD DETAIL

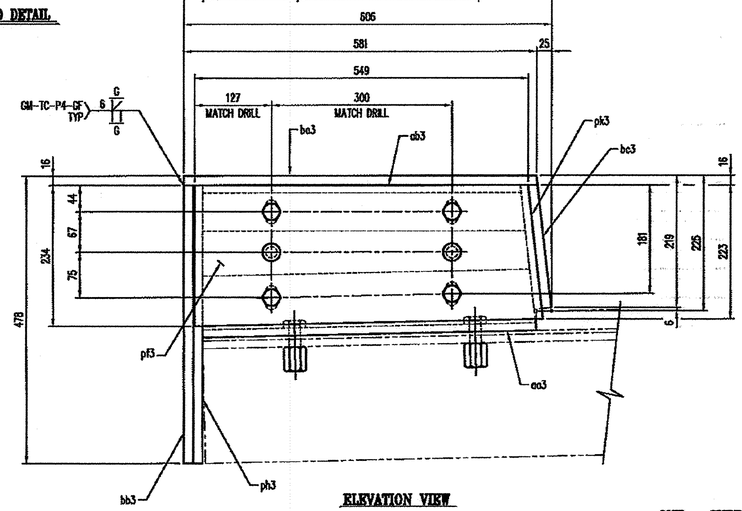

ELEVATION VIEW

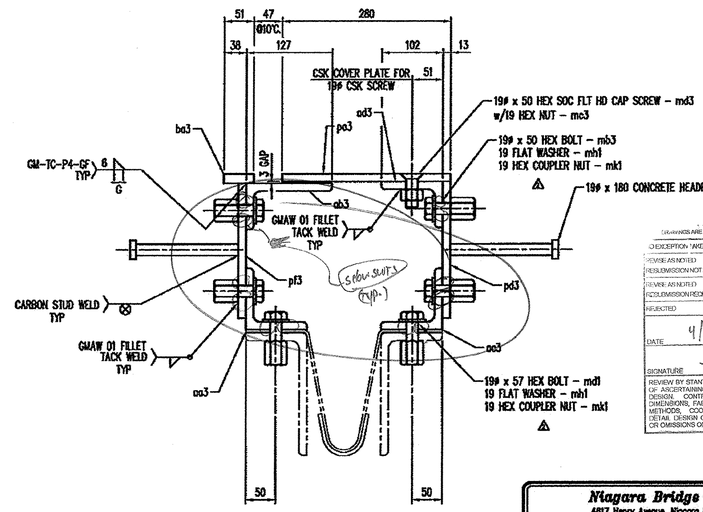

SECTION: A-A

ONE – CURB ASSEMBLY – SCA1

HOT-DIPPED GALVANIZED

REFER TO SHEET #6 FOR SUPPORT ANGLE DETAILS

BILL OF MATERIALS △

#	MARK No.	QTY	DESCRIPTION	MATERIAL	REMARKS
1			ONE – CURB ASSEMBLY – SCA1		HDG
2					
3	md1	4	19ø x 57 HEX BOLT	A325	M/G
4	mh1	12	19 FLAT WASHER	F436	M/G
5	mk1	12	19 HEX COUPLER NUT	A563	M/G
6					
7					
8	ma3	4	19ø x 180 CONCRETE HEADED STUD	A108	
9	mb3	8	19 x 50 HEX BOLT	A325	M/G
10	mc3	3	19 HEX NUT	A563	M/G
11	md3	3	19ø x 50 HEX SOCKET FLAT HEAD CAP SCREW	FB35-93	M/G
12					
13					
14	pa3	ONE	PL 12.7 x 280 x 622	M270M(250)	
15	pb3	ONE	PL 12.7 x 284 x 465	M270M(250)	
16	pc3	ONE	PL 12.7 x 206 x 284	M270M(250)	
17	pd3	ONE	PL 12.7 x 237 x 578	M270M(250)	
18	pf3	ONE	PL 12.7 x 234 x 574	M270M(250)	
19	ph3	ONE	PL 12.7 x 104 x 462	M270M(250)	
20	pk3	ONE	PL 12.7 x 104 x 207	M270M(250)	
21					
22	aa3	ONE	L102 x 102 x 12.7 x 562	M270M(250)	
23	ab3	ONE	L127 x 76 x 12.7 x 538	M270M(250)	
24	ac3	ONE	L102 x 102 x 12.7 x 592	M270M(250)	
25	ad3	ONE	L127 x 76 x 12.7 x 590	M270M(250)	
26					
27	ba3	ONE	BAR 16 x 51 x 589	M270M(250)	
28	bb3	ONE	BAR 16 x 51 x 462	M270M(250)	
29	bc3	ONE	BAR 16 x 51 x 205	M270M(250)	
30					
31					

No.	Description	Date	By	Approved
2	REMOVE PLASTIC CAP	4/23/08	SB	
1	APPROVAL CHANGES	4/04/08	SB	Approved

REVISIONS

Niagara Bridge and Rail
4617 Hervy Avenue, Niagara Falls, N.Y. 14304
Phone: (716) 283-4710 Fax: (716) 283-5137

Project Information:
STATE: VERMONT
COUNTY: -
CITY / TOWNSHIP: BENNINGTON
LOCATION: EAST RD. OVER VT ROUTE 279
PROJECT NO.: AC NH 019-1(53)
OWNER: VT-AOT
CONTRACTOR: -

Drawn By:	Date:	Checked By:	Date:
JJB	3/17/08	TFW	3/24/08

Description: VERMONT – EXPANSION JOINT DETAIL CURB PLATE DETAIL

Sheet No.: 3 of TBD
Scale: NONE
Drawing No.: 10063-01
Rev No.: –

DRAWINGS ARE REVIEWED AS NOTED OTHERWISE

DESCRIPTION / MARK	
REVISE AS NOTED	
RESUBMISSION NOT REQUIRED	X
REVISE AS NOTED RESUBMISSION REQUIRED	
REJECTED	

Stantec

DATE 4/28/08

SIGNATURE

REVIEW BY STANTEC IS FOR THE SOLE PURPOSE OF ASCERTAINING GENERAL CONFORMITY WITH DESIGN. CONTRACTOR IS RESPONSIBLE FOR DIMENSIONS, FABRICATION AND CONSTRUCTION METHODS, COORDINATION OF SUB-TRADES, DETAIL DESIGN OF COMPONENTS, AND ERRORS OR OMISSIONS ON SHOP DRAWINGS.

RECEIVED
MAY 05 2008
G.P.I.