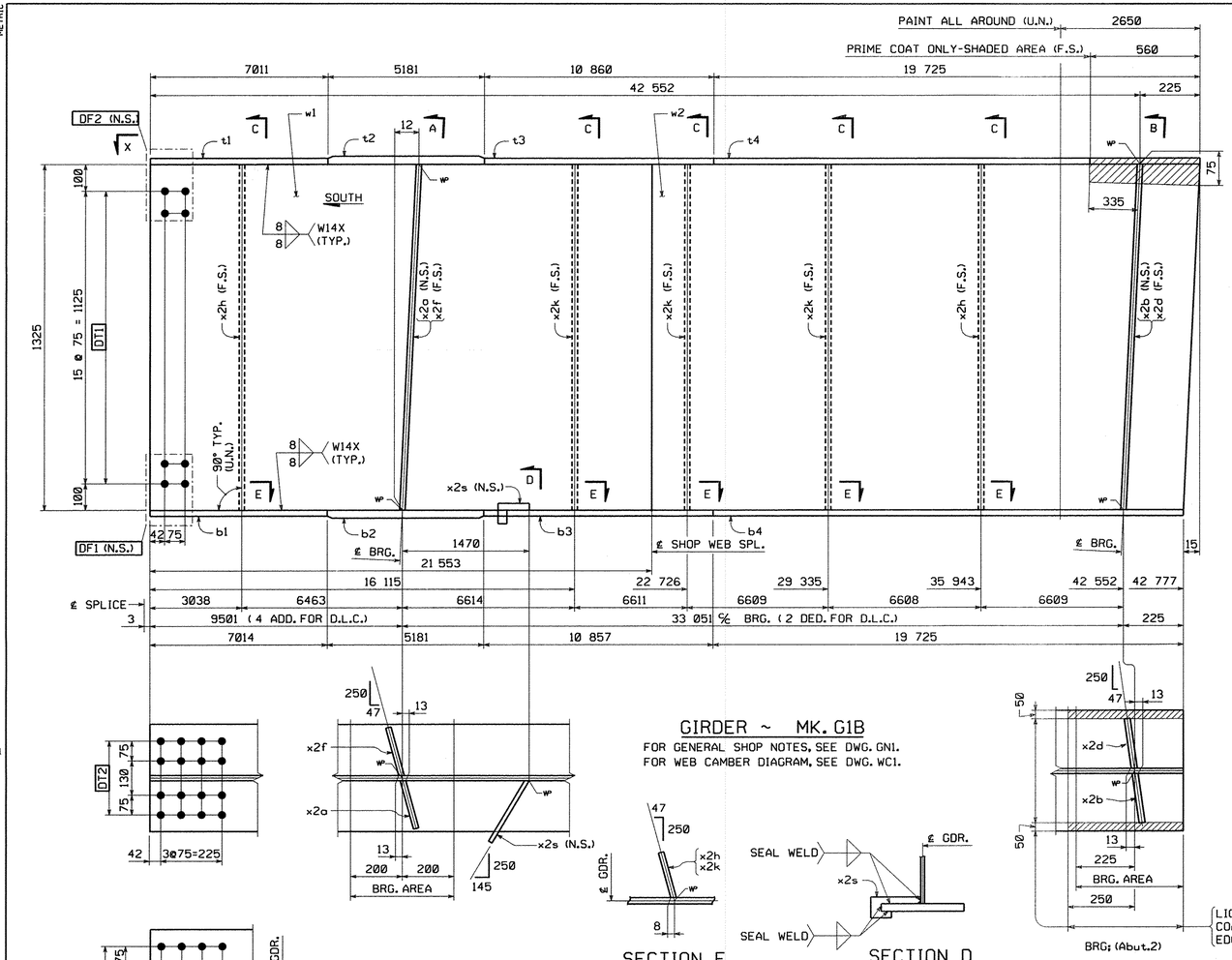

GIRDER ~ MK. G1B

FOR GENERAL SHOP NOTES, SEE DWG. GN1.
FOR WEB CAMBER DIAGRAM, SEE DWG. WC1.

SECTION E

SECTION D
(DEVELOPED)

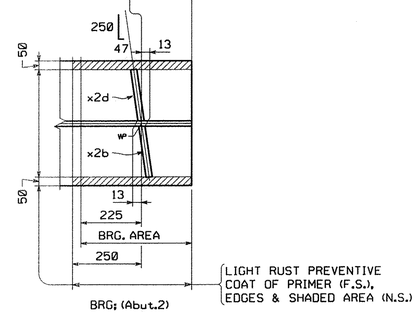

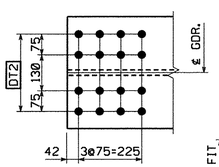

VIEW X

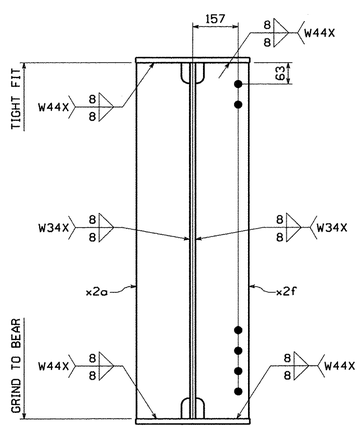

SECTION A
(DEVELOPED)

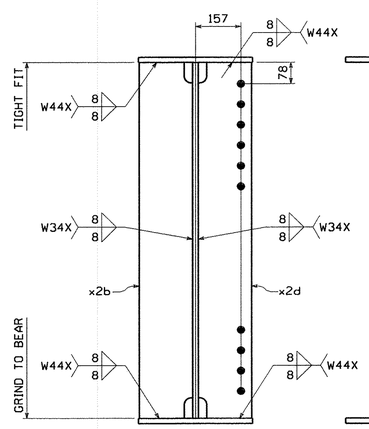

SECTION B
(DEVELOPED)

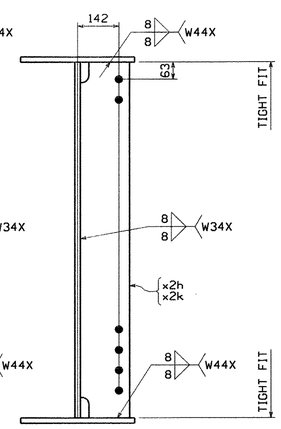

SECTION C
(DEVELOPED)

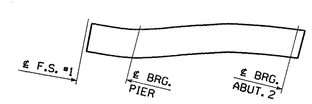

ORIENTATION DIAGRAM
ORIENTATION DIAGRAM (B GIRDERS)

BILL OF MATERIAL

QTY EA.	MARK	COMM	DESCRIPTION	LENGTH	SPEC	GRADE	TEST	REMARKS	ITEM	GROSS WEIGHT EA	DEDUCTED WEIGHT	NET WEIGHT EA
1	G1B		GIRDER							11602.45	2.02	11600.43
1	w1	PL	13 x 1325	21 553	M270M	345W	T		03001	2,913.96	1.01	2,912.95
1	w2	PL	13 x 1325	21 239	M270M	345W	T		03001	2,871.51	1.01	2,870.50
1	t1	PL	19 x 406	7 011	M270M	345W	T		04006	424.50	0.00	424.50
1	t2	PL	29 x 406	5 181	M270M	345W	T		04001	478.80	0.00	478.80
1	t3	PL	19 x 406	10 861	M270M	345W	T		04005	657.61	0.00	657.61
1	t4	PL	19 x 406	19 725	M270M	345W	T		04002	1,194.30	0.00	1,194.30
1	b1	PL	19 x 406	7 014	M270M	345W	T		04006	424.68	0.00	424.68
1	b2	PL	29 x 406	5 181	M270M	345W	T		04001	478.80	0.00	478.80
1	b3	PL	19 x 406	10 858	M270M	345W	T		04005	657.43	0.00	657.43
1	b4	PL	19 x 406	19 725	M270M	345W	T		04002	1,194.30	0.00	1,194.30
1	x2a	PL	22.2 x 190	1 325	M270M	345W			70001	43.87	0.00	43.87
1	x2b	PL	22.2 x 190	1 325	M270M	345W			70001	43.87	0.00	43.87
1	x2d	PL	22.2 x 190	1 325	M270M	345W			70001	43.87	0.00	43.87
1	x2f	PL	22.2 x 190	1 325	M270M	345W			70001	43.87	0.00	43.87
2	x2h	PL	14.3 x 175	1 325	M270M	345W			70002	26.03	0.00	26.03
3	x2k	PL	14.3 x 175	1 325	M270M	345W			70002	26.03	0.00	26.03
1	x2s	PL	6.4 x 69	277	M270M	345W			70003	0.96	0.00	0.96
									TOTAL WEIGHT THIS SHEET:		11,600.43	kgs.

NO.	REVISION	BY	CHK'D	DATE
△				
△				
△				

HOLES: 15/16" ø
BOLTS: NONE
COATING: SEE DWG. GN1
CODE(S): 30
SCALE: N.T.S.

HIGH STEEL STRUCTURES INC.
An Affiliate of High Industries Inc.
An ISO 9001:2000 Certified Company
Lancaster Facility: 195 Old Philadelphia Pike, Lancaster, PA 17603-0008, Phone (717) 299-5211
Williamsport Facility: 3501 W. 4th Street, Williamsport, PA 17701, Phone (570) 326-9051
www.highsteel.com

GIRDER G1B
SHARED USE PATH OVER VT ROUTE 279
SHARED USE PATH STA. 1+148.400 TO STA. 1+220.200
TOWN OF BENNINGTON VERMONT, BRIDGE B11
STATE OF VERMONT
AGENCY OF TRANSPORTATION

	AC NH 019-1(53)	FED. AID PROJ. NO.	
GENERAL CONTRACTOR	J.A. McDONALD, INC.	HSSI PROJ. MGR	DEB KUPRES
SHPMT 2	DRAWING MANAGER: BRITIGAN (IH)	MADE BY: DRJ	CHK'D. BY: CS	DATE: 10-1-07
STATE: VT	HSSI PROJECT NUMBER: S-1070147	HSSI STRUCT. ID: C	DRAWING NUMBER: 3 OF 7

METRIC

PLOTTED: 10/2/2007 2:41:51 PM BY: MKreidel SHIPMENT 01 PMAENG: 50028214 PRD: 50028315 SHIPAERECT: 50028316

1070147C X1 10/3/07 10/3/07Approval TO:J.A. McDonald, Inc.