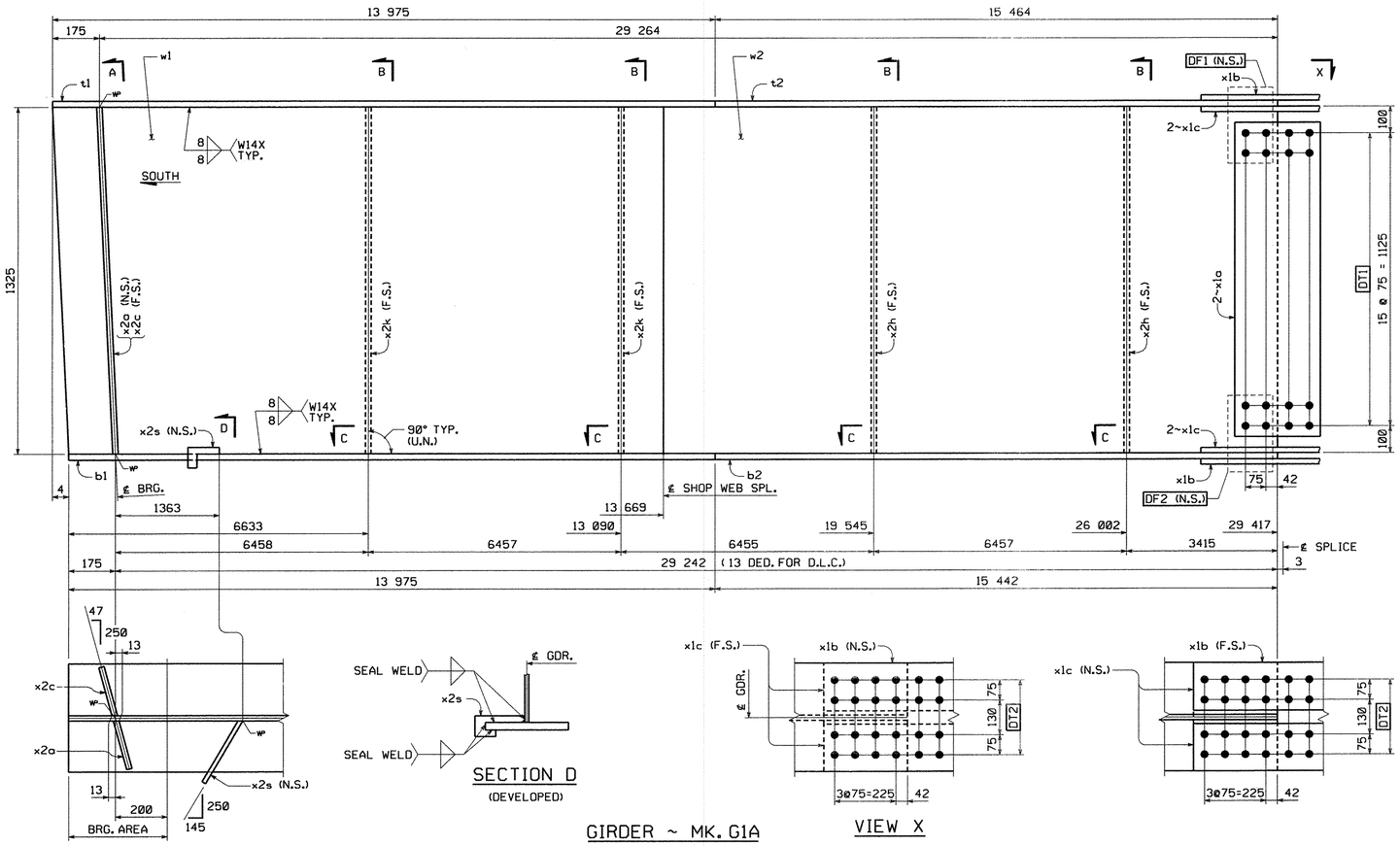

GIRDER ~ MK. G1A

FOR GENERAL SHOP NOTES, SEE DWG. GN1.
FOR WEB CAMBER DIAGRAM, SEE DWG. WC1.

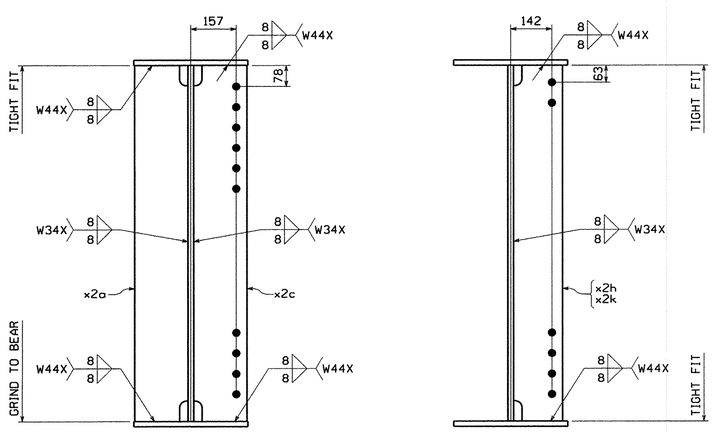

SECTION A
(DEVELOPED)

SECTION B
(DEVELOPED)

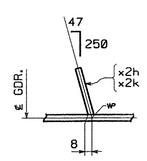

SECTION C

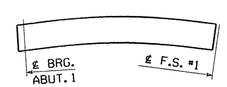

ORIENTATION DIAGRAM

BILL OF MATERIAL

QTY EA.	MARK	COMM	DESCRIPTION	LENGTH	SPEC	GRADE	TEST	REMARKS	ITEM	GROSS WEIGHT EA.	DEDUCTED WEIGHT	NET WEIGHT EA.
1	G1A		GIRDER							7942.18	0.27	7941.91
1	w1	PL	13 x 1325	13 681	M270M	345W	T		03002	1,849.67	0.27	1,849.40
1	w2	PL	13 x 1325	15 767	M270M	345W	T		03003	2,131.70	0.00	2,131.70
1	t1	PL	19 x 406	13 976	M270M	345W	T		04004	846.21	0.00	846.21
1	t2	PL	19 x 406	15 464	M270M	345W	T		04003	936.31	0.00	936.31
1	b1	PL	19 x 406	13 976	M270M	345W	T		04004	846.21	0.00	846.21
1	b2	PL	19 x 406	15 442	M270M	345W	T		04003	934.98	0.00	934.98
2	x1a	PL	14.3 x 1205	320	M270M	345W	T		06001	43.24	0.00	43.24
2	x1b	PL	15.9 x 406	620	M270M	345W	T		06002	31.37	0.00	31.37
4	x1c	PL	15.9 x 178	620	M270M	345W	T		06003	13.77	0.00	13.77
1	x2a	PL	22.2 x 190	1 325	M270M	345W			70001	43.87	0.00	43.87
1	x2c	PL	22.2 x 190	1 325	M270M	345W			70001	43.87	0.00	43.87
2	x2h	PL	14.3 x 175	1 325	M270M	345W			70002	26.03	0.00	26.03
2	x2k	PL	14.3 x 175	1 325	M270M	345W			70002	26.03	0.00	26.03
1	x2s	PL	6.4 x 69	277	M270M	345W			70003	0.96	0.00	0.96
								TOTAL WEIGHT THIS SHEET:		7,941.91	kgs.	

NO.	REVISION	BY	CHK'D	DATE
△				
△				
△				

HOLES: 15/16"ø
BOLTS: NONE
COATING: NONE
CODE(S): 30
SCALE: N.T.S.

HIGH STEEL STRUCTURES INC.
An ISO 9001:2000 Certified Company
An Affiliate of High Industries Inc.
Lancaster Facility: 1915 Old Philadelphia Pike, Lancaster, PA 17602-0008, Phone (717) 299-5211
Williamsport Facility: 3501 W. 4th Street, Williamsport, PA 17701, Phone (570) 326-9051
www.Highsteel.com

GIRDER G1A
SHARED USE PATH OVER VT ROUTE 279
SHARED USE PATH STA. 1+148.400 TO STA. 1+220.200
TOWN OF BENNINGTON VERMONT, BRIDGE B11
STATE OF VERMONT
AGENCY OF TRANSPORTATION

		FED. AID PROJ. NO.	AC NH 019-1(53)
GENERAL CONTRACTOR	J.A. McDONALD, INC.	HSSI PROJ. MGR	DEB KUPRES
SHPMT 2	DRAWING MANAGER: BRITIGAN (IH)	MADE BY: ERS	CHK'D. BY: CS	DATE: 9-28-07
STATE VT	HSSI PROJECT NUMBER: S-1070147	HSSI STRUCT. ID: C	DRAWING NUMBER: 1 OF 7

METRIC
SHIPMENT 01 PM&ENG: 5002814 PRO: 5002815 SHIP&ERECT: 5002816
BY: MKrendel
PLOTTED: 10/2/2007 2:45:34 PM
1070147C X1 10/3/07 10/3/07Approval TO:J.A. McDonald, Inc.