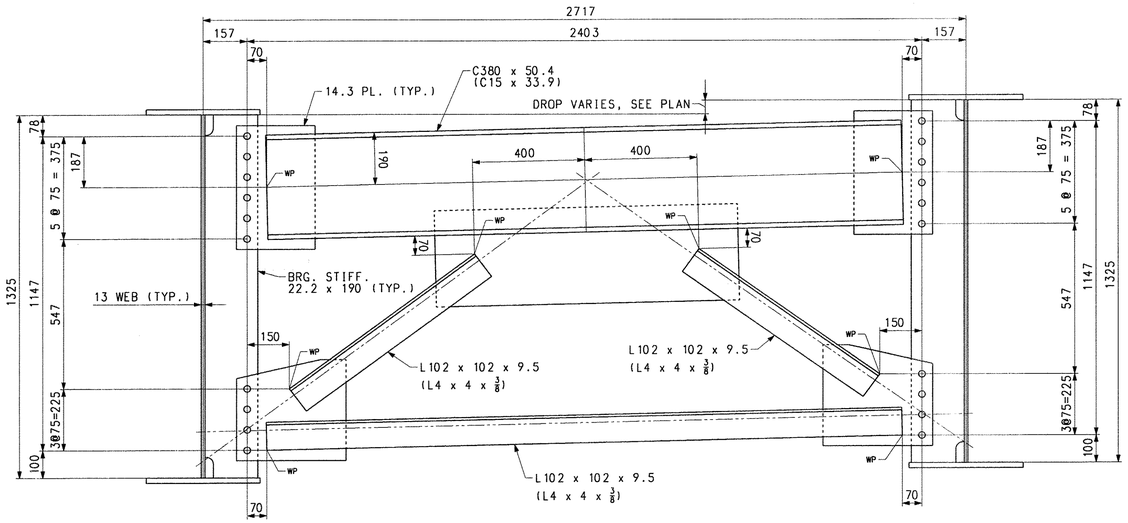

TYP. END CROSSFRAME LAYOUT

(LOOKING TOWARDS ABUT. FROM CENTER OF SPAN)

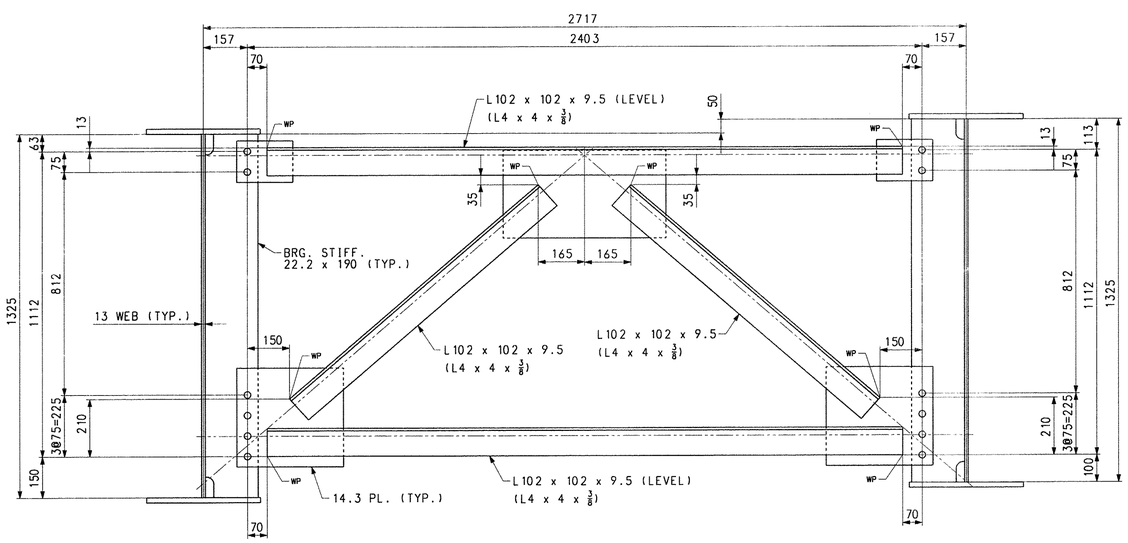

PIER CROSSFRAME LAYOUT

(LOOKING BACKSTATIONS)

NOTES:

FOR NOTES, SEE DRAWING WS1.
WORK THIS DRAWING WITH WS1.

NOTE
THE PURPOSE OF THIS DRAWING IS TO COORDINATE GEOMETRIC CONTROL INFORMATION. THIS DRAWING IS SUBMITTED FOR INFORMATION ONLY AND IS NOT INTENDED FOR SHOP FABRICATION. THIS DRAWING IS FOR REFERENCE ONLY. APPROVAL IS NOT REQUIRED.

NO.	REVISION	BY	CHK'D	DATE
△				
△				
△				

HIGH STEEL STRUCTURES INC.
An ISO 9001:2000 Certified Company
An Affiliate of High Industries Inc.
1915 Old Philadelphia Pike
Lancaster, PA 17602-0008
Phone (717) 299-5211
www.highsteel.com

HOLES	15/16" Ø
BOLTS	NONE
COATING	NONE
CODE(S)	
SCALE	N.T.S.

TYPICAL DETAILS - CROSSFRAME LAYOUTS
SHARED USE PATH OVER VT ROUTE 279
SHARED USE PATH STA. 1+148.400 TO STA. 1+220.200
TOWN OF BENNINGTON VERMONT, BRIDGE B11
STATE OF VERMONT
AGENCY OF TRANSPORTATION

STATE CONT. OR REF. NO.	AC NH 019-1(53)	FED. AID PROJ. NO.	
GENERAL CONTRACTOR	J.A. McDONALD, INC.	HSSI PROJ. MGR	DEB KUPRES

SHIPMT	2	DRAWING MANAGER	BRITIGAN (IH)	MADE BY	ERS	CHK'D. BY	CS	DATE	9-25-07
STATE	VT	HSSI PROJECT NUMBER	S-1070147	HSSI STRUCT. ID	C	DRAWING NUMBER	TD1 OF TD2		

SHIPMENT 1 PMAENG: 50028L4 PRO: 50028L5 SHIPXERECT: 50028L6
PLOTTED: 10/02/07 14:12:54 BY: MKreidel