METRIC

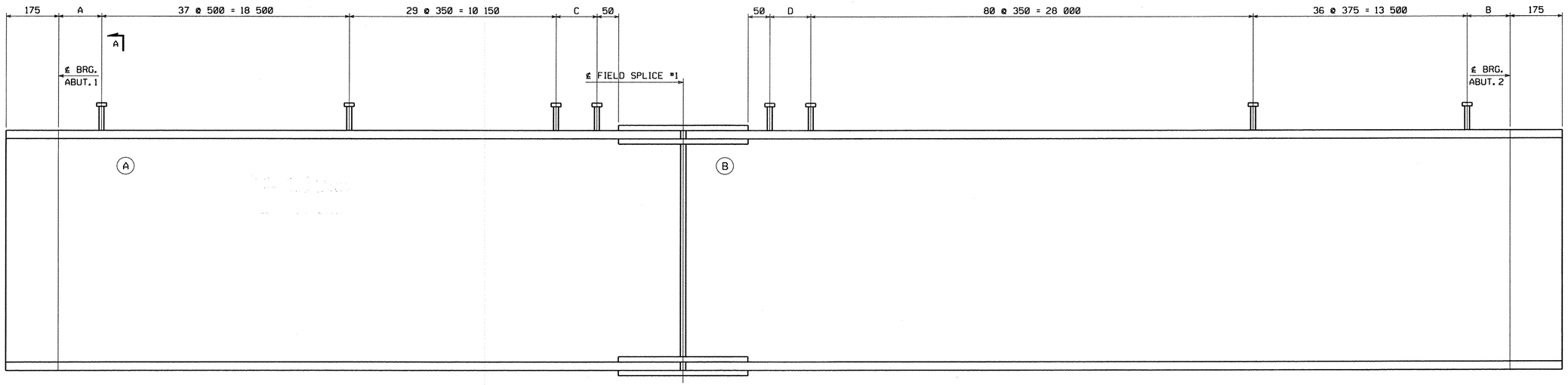

SHEAR STUD CONNECTION LOCATION LAYOUT

FOR NOTES, SEE DRAWING E1.
WORK THIS DRAWING WITH DRAWING E1.

(A) INDICATES SUFFIX MARK OF SHIPPING PIECE.

MARK	A	B	C	D
G1	108	155	207	308
G2	103	151	217	315
G3	97	149	229	320
G4	91	146	241	327

DO NOT MATCH DESIGN PLANS (GIRDERS ARE REVERSED), PLEASE VERIFY

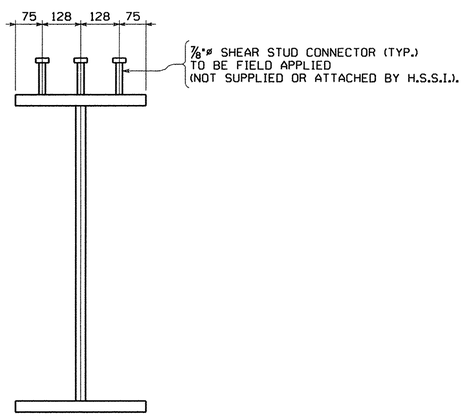

SECTION A

NO.	REVISION	BY	CHK'D	DATE
△				
△				
△				

HOLES

BOLTS

COATING

CODE(S)

SCALE N.T.S.

HIGH STEEL STRUCTURES INC.
An ISO 9001:2000 Certified Company — An Affiliate of High Industries Inc.
Lancaster Facility: 1915 Old Philadelphia Pike, Lancaster, PA 17602-2008, Phone (717) 299-5211
Williamsport Facility: 3501 N. 4th Street, Williamsport, PA 17701, Phone (570) 326-9051
www.Highsteel.com

ERECTION PLAN ~ STUD LAYOUTS
EAST ROAD OVER VT ROUTE 279
EAST ROAD STA. 1+148.400 TO STA. 1+220.200
TOWN OF BENNINGTON VERMONT, BRIDGE B11
STATE OF VERMONT
AGENCY OF TRANSPORTATION

	AC NH 019-1(53)	FED. AID PROJ. NO.	
GENERAL CONTRACTOR	J.A. McDONALD, INC.	HSSI PROJ. MGR	DEB KUPRES

SHPMT		DRAWING MANAGER	BRITIGAN (IH)	MADE BY	MAF	CHK'D. BY	CS	DATE	9-25-07
STATE	VT	HSSI PROJECT NUMBER	S-1070147	HSSI STRUCT. ID	B	DRAWING NUMBER	E2 OF E2		

PLOTTED: 10/1/2007 11:07:57 AM BY: MKreidel SHIPMENT 01 PM&ENG: 5082811 PRD: 5082812 SHIP&ERECT: 5082813

1070147B X1 10/2/07 10/2/07Approval TO:J.A. McDonald, Inc.