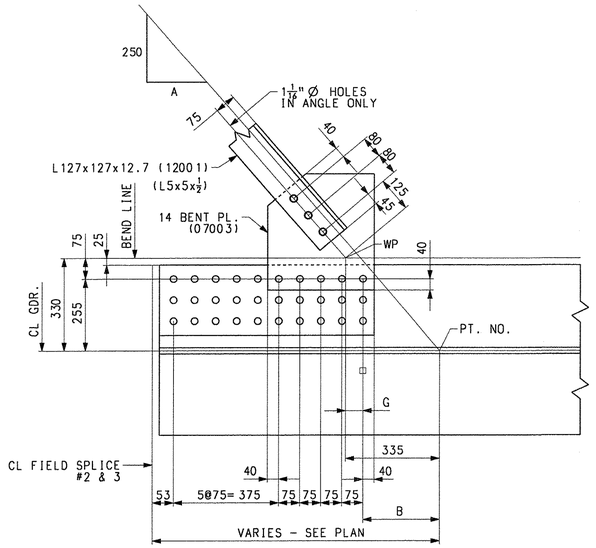

LATERAL BRACING CONNECTION LAYOUT

(POINTS 114 & 116 AS SHOWN)
(OTHER POINT NOS. SIMILAR)

POINT NOS.	A	B	G
EASTSIDE 114	209	273	62
EASTSIDE 116	212	282	53
EASTSIDE 117	218	288	47
WESTSIDE 156	211	273	62
WESTSIDE 158	214	282	53
WESTSIDE 159	216	287	48

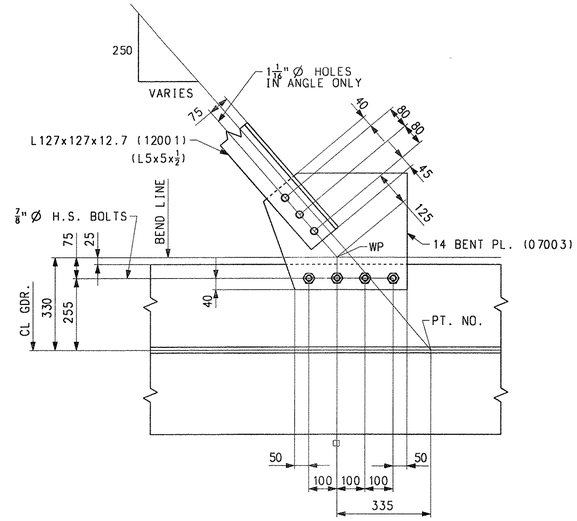

LATERAL BRACING CONNECTION LAYOUT

(EASTSIDE OF POINTS 66 & 68 AS SHOWN)
(EASTSIDE OF POINT NO. 69 & WESTSIDE OF POINT NOS. 204, 206 & 207 SIMILAR)

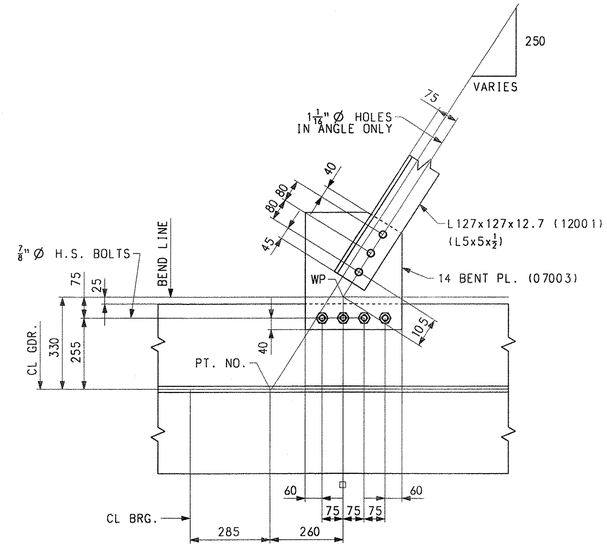

LATERAL BRACING CONNECTION LAYOUT

(POINTS 401 & 402 AS SHOWN)
(POINT NOS. 403, 410, 411 & 412 SIMILAR)

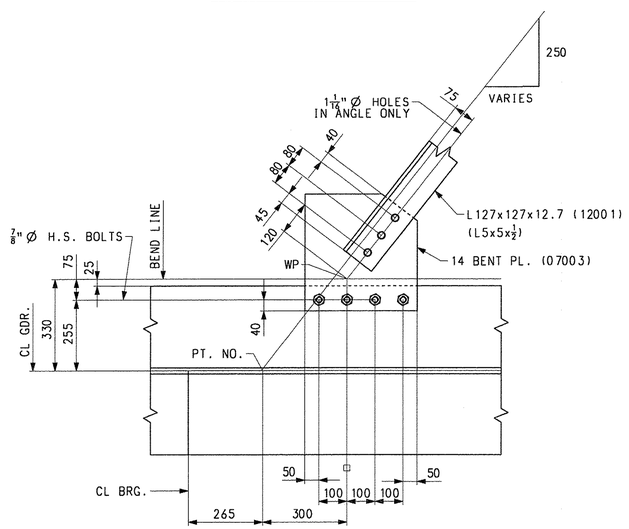

LATERAL BRACING CONNECTION LAYOUT

(POINTS 407 & 408 AS SHOWN)
(POINT NOS. 404, 405, 406 & 409 SIMILAR)

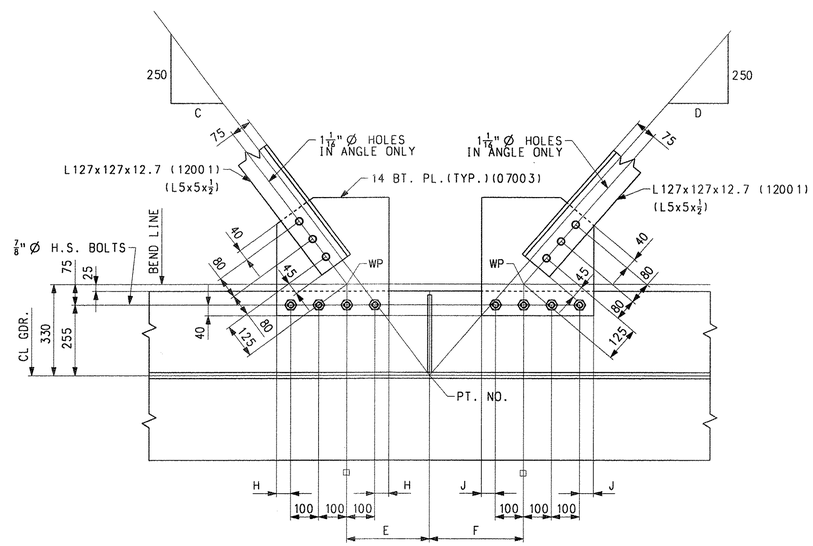

LATERAL BRACING CONNECTION LAYOUT

(POINTS 54, 56, 216 & 218 AS SHOWN)
(OTHER POINT NOS. SIMILAR)

POINT NOS.	C	D	E	F	H	J
54	182	211	295	335	50	60
56	182	214	295	335	50	60
57	188	216	295	335	50	60
216	209	182	335	295	60	50
218	212	184	335	295	60	50
219	218	186	335	295	60	50

NOTES:

FOR NOTES, SEE DRAWING WS1.
WORK THIS DRAWING WITH WS1 THRU WS3.

NOTE
THE PURPOSE OF THIS DRAWING IS TO COORDINATE GEOMETRIC CONTROL INFORMATION. THIS DRAWING IS SUBMITTED FOR INFORMATION ONLY AND IS NOT INTENDED FOR SHOP FABRICATION. THIS DRAWING IS FOR REFERENCE ONLY. APPROVAL IS NOT REQUIRED.

TVGA CONSULTANTS

☒ NO EXCEPTIONS TAKEN ☐ REJECTED
☐ FURNISH AS CORRECTED
☐ REVISE AND RESUBMIT

ENGINEER has reviewed Shop Drawings and Samples and other data which Contractor is required to submit, only for conformance with the information given in the Contract Documents and compatibility with the design concept of the completed Project as a functioning whole as indicated in the Contract Documents. Such reviews do not extend to means, methods, techniques, sequences or procedures of construction or to safety precautions and programs incident thereto. Contractor is responsible for dimensions to be confirmed and correlated at the job site; for information that pertains solely to the fabrication processes or to techniques of construction; and for coordination of the work of all trades.

BY: [signature]
DATE: 11/8/07

NO.	REVISION	BY	CHK'D	DATE
△				
△				
△				

HOLES 15/16" Ø (U.N.)
BOLTS AS NOTED
COATING NONE
CODE(S)
SCALE N.T.S.

HIGH STEEL STRUCTURES INC.
1915 Old Philadelphia Pike Lancaster, PA 17602-2008 Phone (717) 299-5211 www.highsteel.com
An ISO 9001:2000 Certified Company — An Affiliate of High Industries Inc.

TYPICAL DETAILS - LATERAL BRACING LAYOUTS
VT ROUTE 279 OVER FURNACE BROOK
VT ROUTE 279 STA. 8+542.000 TO STA. 8+685.000
TOWN OF BENNINGTON VERMONT, BRIDGE B12
STATE OF VERMONT
AGENCY OF TRANSPORTATION

STATE CONT. OR REF. NO.	AC NH F019-1(53)	FED. AID PROJ. NO.	
GENERAL CONTRACTOR	J.A. McDONALD, INC.	HSSI PROJ. MGR	DEB KUPRES
SHPMT 3	DRAWING MANAGER BRITIGAN (IH)	MADE BY KLW	CHK'D. BY WBW	DATE 11/1/07
STATE VT	HSSI PROJECT NUMBER S-1070147	HSSI STRUCT. ID A	DRAWING NUMBER TD2 OF TD4

SHIPMENT 1 PMAENG: 5002B1Z PRO: 5002B1B SHIPAERECT: 5002B19
PLOTTED: 11/30/07 12:48:14 BY: MKreidel

1070147A X1 12/3/07 12/3/07Approval TO:J.A. McDonald, Inc.