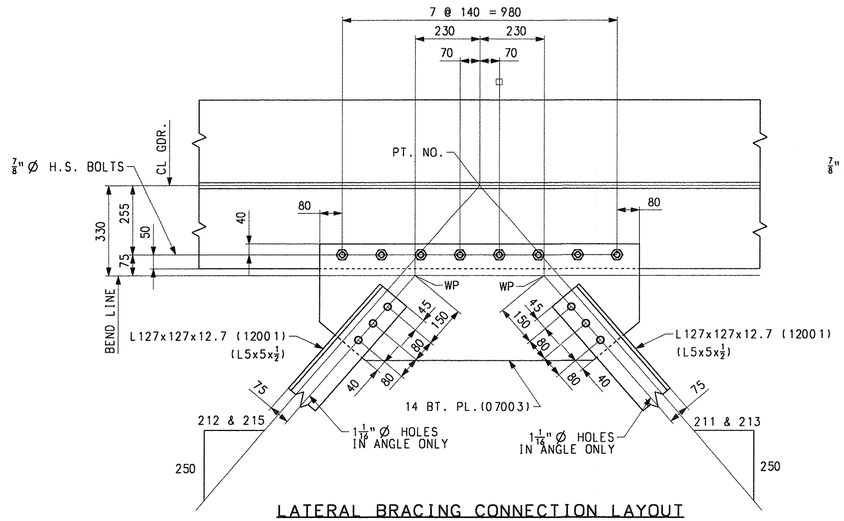

LATERAL BRACING CONNECTION LAYOUT

(TYP. ALONG G1 & G3 (U.N.))

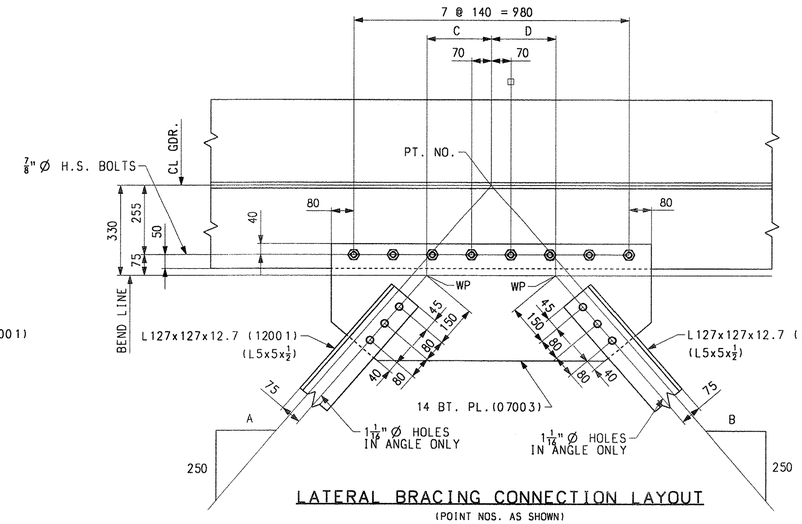

LATERAL BRACING CONNECTION LAYOUT

(POINT NOS. AS SHOWN)

POINT NOS.	A	B	C	D
221 & 251	159	183	165	195
235	212	187	230	200
265	215	190	230	200
236	189	211	200	230
266	192	213	200	230
250	183	156	195	165
280	185	159	195	165

TVGA CONSULTANTS

☒ NO EXCEPTIONS TAKEN ☐ REJECTED
☐ FURNISH AS CORRECTED
☐ REVISE AND RESUBMIT

ENGINEER has reviewed Shop Drawings and Samples and other data which Contractor is required to submit, only for conformance with the information given in the Contract Documents and compatibility with the design concept of the completed Project as a functioning whole as indicated in the Contract Documents. Such reviews do not extend to means, methods, techniques, sequences or procedures of construction or to safety precautions and programs incident thereto. Contractor is responsible for dimensions to be confirmed and correlated at the job site, for information that pertains solely to the fabrication processes or to techniques of construction; and for coordination of the work of all trades.

BY: [illegible]
DATE: 1/8/08

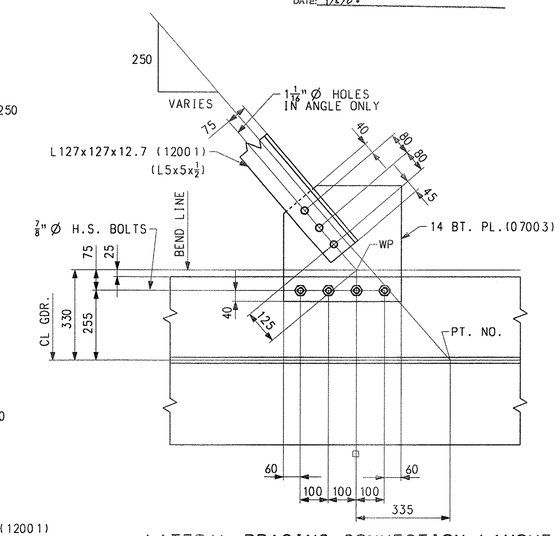

LATERAL BRACING CONNECTION LAYOUT AT CROSSFRAMES

(TYP. ALONG G2,G4 & G5 (U.N.))
(PT.60 EASTSIDE, AS SHOWN, OTHER LOCATIONS SIMILAR)

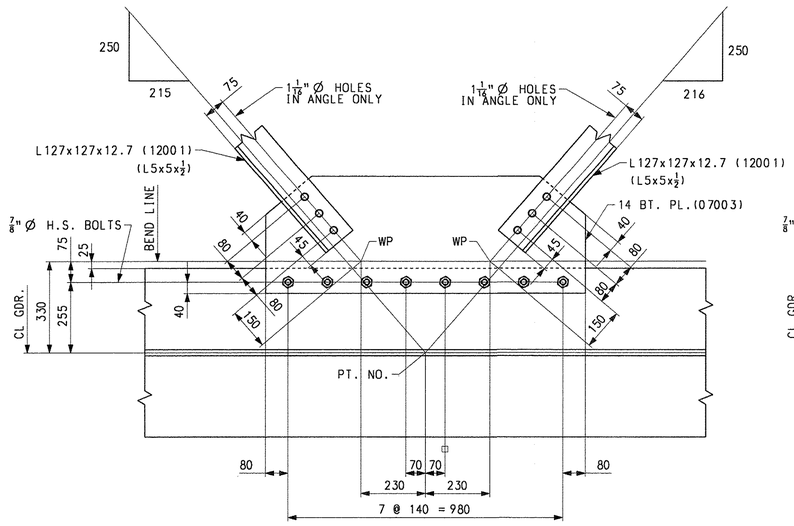

LATERAL BRACING CONNECTION LAYOUT

(TYP. ALONG G6 (U.N.))

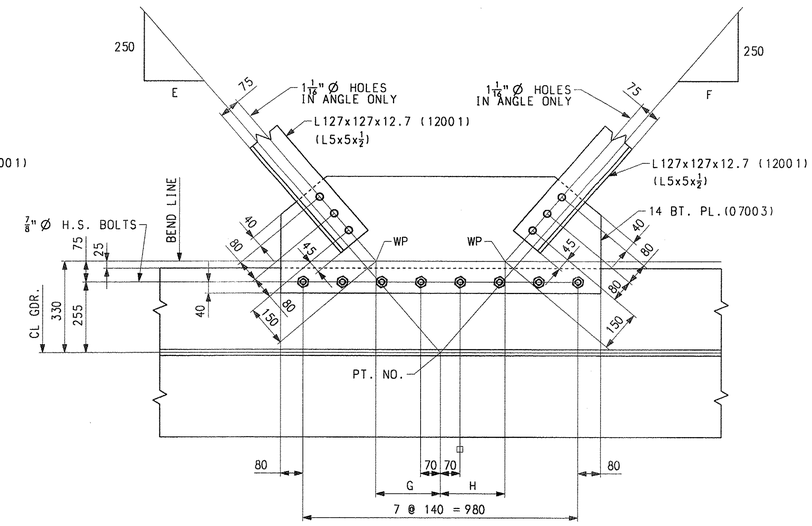

LATERAL BRACING CONNECTION LAYOUT

(POINT NOS. AS SHOWN)

POINT NOS.	E	F	G	H
281	160	187	165	195
295	215	193	230	200
296	192	216	200	230
310	185	161	195	165

NOTES:

FOR NOTES, SEE DRAWING WS1.
WORK THIS DRAWING WITH WS1 THRU WS3.

NOTE
THE PURPOSE OF THIS DRAWING IS TO COORDINATE GEOMETRIC CONTROL INFORMATION. THIS DRAWING IS SUBMITTED FOR INFORMATION ONLY AND IS NOT INTENDED FOR SHOP FABRICATION. THIS DRAWING IS FOR REFERENCE ONLY. APPROVAL IS NOT REQUIRED.

NO.	REVISION	BY	CHK'D	DATE
△				
△				
△				

HIGH STEEL STRUCTURES INC.
1915 Old Philadelphia Pike
Lancaster, PA 17602-2008
Phone (717) 299-5211
www.highsteel.com
An ISO 9001:2000 Certified Company
An Affiliate of High Industries Inc.

HOLES: 15/16" Ø (U.N.)
BOLTS: AS NOTED
COATING: NONE
CODE(S):
SCALE: N.T.S.

TYPICAL DETAILS - LATERAL BRACING DETAILS
VT ROUTE 279 OVER FURNACE BROOK
VT ROUTE 279 STA. 8+542.000 TO STA. 8+685.000
TOWN OF BENNINGTON VERMONT, BRIDGE B12
STATE OF VERMONT
AGENCY OF TRANSPORTATION

STATE CONT. OR REF. NO.	AC NH F019-1(53)	FED. AID PROJ. NO.	
GENERAL CONTRACTOR	J.A. McDONALD, INC.	HSSI PROJ. MGR	DEB KUPRES
SHPMT 3	DRAWING MANAGER: BRITIGAN (IH)	MADE BY: KLW	CHK'D. BY: WBW	DATE: 11/1/07
STATE VT	HSSI PROJECT NUMBER: S-1070147	HSSI STRUCT. ID: A	DRAWING NUMBER: TD1 OF TD4

SHIPMENT 1 PM&ENG: 50028L7 PRD: 50028L9 SHIPAERECT: 50028L9
PLOTTED: 11/30/07 12:47:53 BY: MKreidel

1070147A X1 12/3/07 12/3/07Approval TO:J.A. McDonald, Inc.