## NOTE TO CONTRACTOR AND APPROVER

PLEASE VERIFY THE DIRECTION OF SKEWED SLOTS IN RELATION TO STATION AHEAD

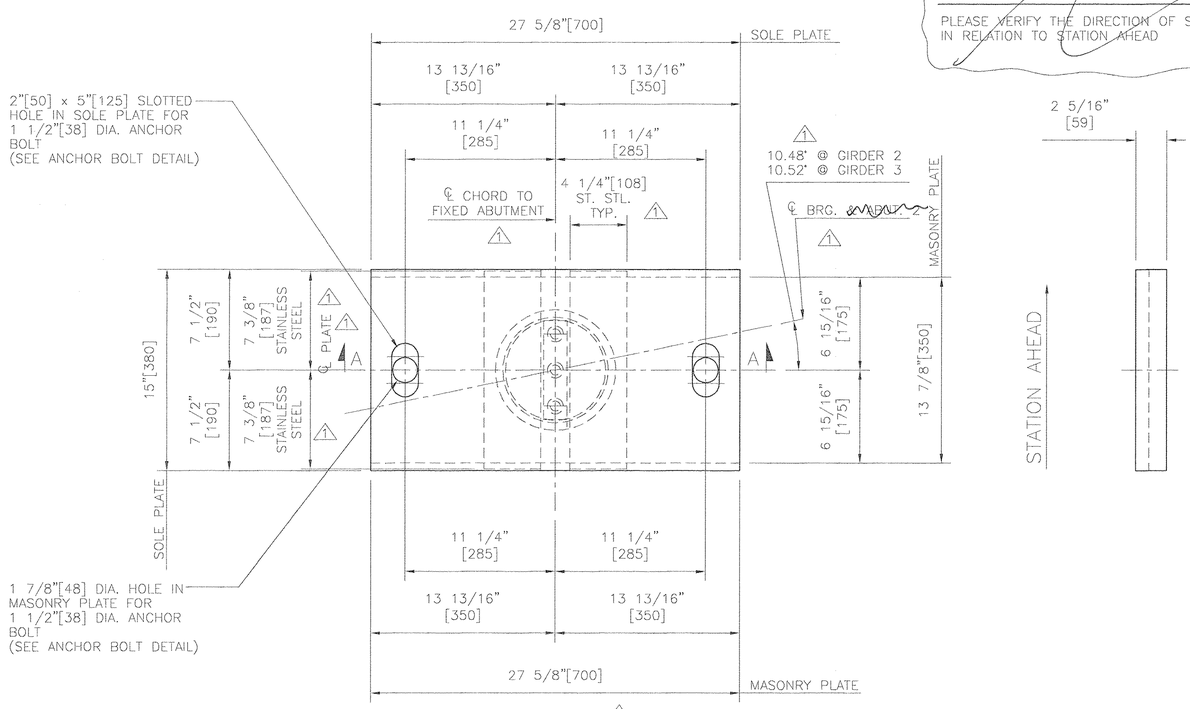


PLAN VIEW




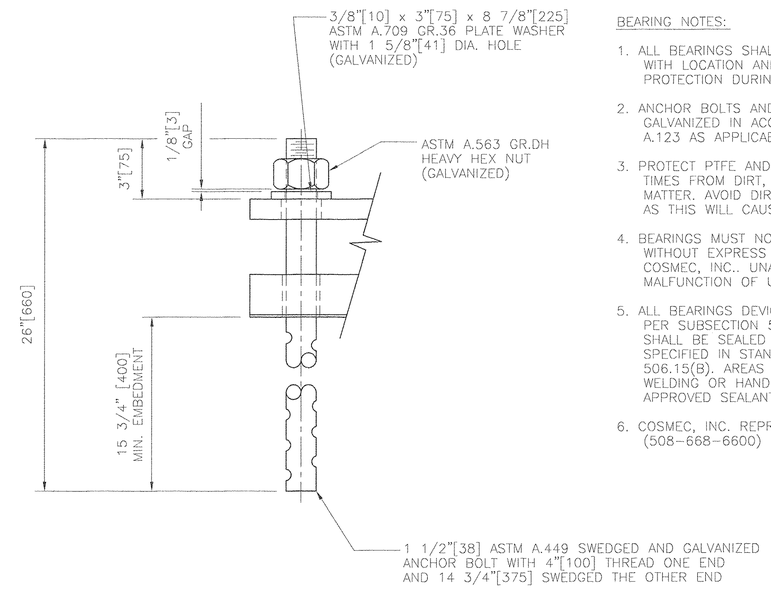


ANCHOR BOLT DETAIL

BEARING NOTES:

1. ALL BEARINGS SHALL BE MARKED FOR IDENTIFICATION WITH LOCATION AND SHALL BE WRAPPED FOR PROTECTION DURING SHIPPING AND STORAGE.
2. ANCHOR BOLTS AND HARDWARE SHALL BE GALVANIZED IN ACCORDANCE WITH ASTM A.153 OR A.123 AS APPLICABLE.
3. PROTECT PTFE AND STAINLESS STEEL SURFACES AT ALL TIMES FROM DIRT, WELD SPATTER AND ANY FOREIGN MATTER. AVOID DIRECT SUNLIGHT TO PTFE SURFACES AS THIS WILL CAUSE DAMAGE.
4. BEARINGS MUST NOT BE DISMANTLED AT ANY TIME WITHOUT EXPRESS WRITTEN AUTHORIZATION FROM COSMEC, INC.. UNAUTHORIZED DISASSEMBLY MAY CAUSE MALFUNCTION OF UNIT.
5. ALL BEARINGS DEVICES SHALL BE ZINC METALLIZED AS PER SUBSECTION 531.04(b) AND 506.15(b). BEARINGS SHALL BE SEALED WITH AN APPROVED SEALER AS SPECIFIED IN STANDARD SPECIFICATION SUBSECTION 506.15(B). AREAS OF METALLIZING DAMAGED BY FIELD WELDING OR HANDLING SHALL BE PAINTED WITH AN APPROVED SEALANT. 6 MILS. MIN. EXTERIOR SURFACES.
6. COSMEC, INC. REPRESENTATIVE: MR. MATT McANDREWS (508-668-6600)

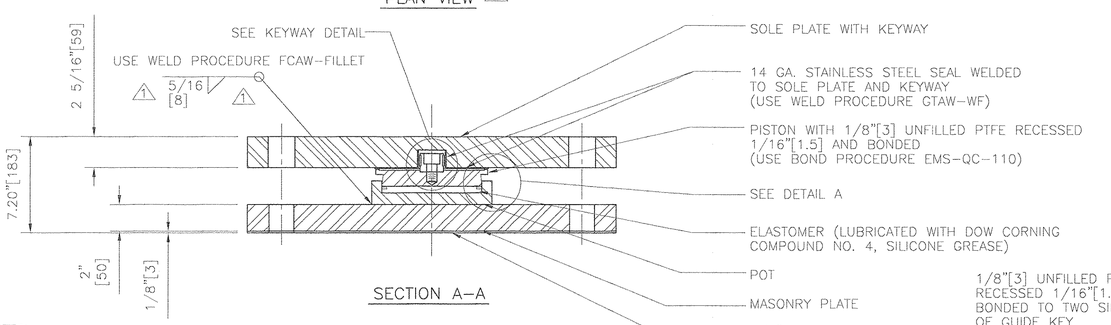


SECTION A-A

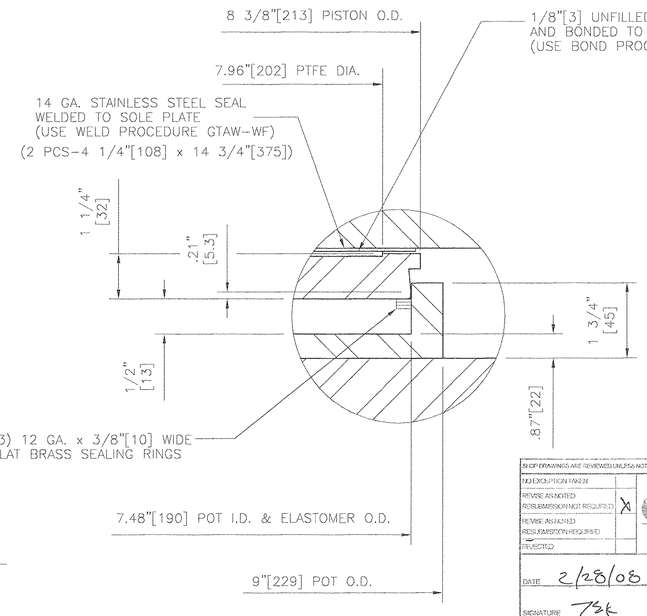


DETAIL A

BEARING MATERIALS:

STEEL – ASTM A.709 GR.345 (GR.50) ZINC METALLIZED

STAINLESS STEEL – ASTM A.240 TYPE 304, #8 MIRROR FINISH

PTFE – ASTM D.4894 VIRGIN UNFILLED

BRASS RINGS – ASTM B.36 HALF HARD

ELASTOMER – AASHTO 50 ±5 DUROMETER NEOPRENE

PREFORMED FABRIC PAD – AASHTO SPEC. 18.4.9.1 DIV. II

SOCKET HEAD CAPSCREWS – ASTM A.574

ANCHOR BOLT & HARDWARE – SEE DETAIL

RECEIVED
MAR 03 2008
G.P.I.

## NOTE TO CONTRACTOR:

OVER ALL BEARING HEIGHTS DIFFER FROM THOSE SHOWN ON THE CONTRACT PLANS. CONTRACTOR SHALL RECOMPUTE ALL BEARING SEAT ELEVATIONS TO ACCURATELY REFLECT THE HEIGHTS OF BEARINGS SUPPLIED.

## COSMEC GUIDED EXPANSION POT BEARING

LOCATION – ABUTMENT 2, GIRDERS 2 AND 3
QUANTITY – 2
TOTAL VERTICAL CAPACITY – 154 KIPS[685kN]
TOTAL HORIZONTAL CAPACITY – 31 KIPS[137kN]
TOTAL LONGITUDINAL MOVEMENT – ±1.71"[±43.5mm]
TOTAL TRANSVERSE MOVEMENT – ±1/16"[±1.5mm]
ROTATION CAPACITY – 0.015 RADIANS

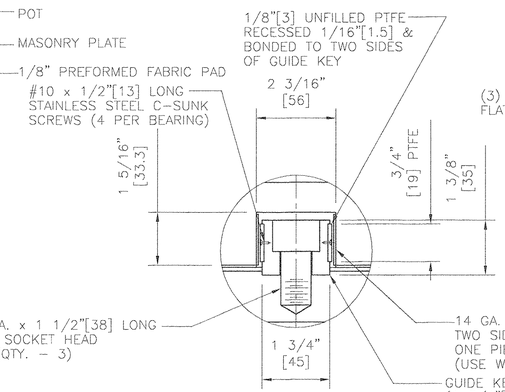


KEYWAY DETAIL

SHOP DRAWINGS ARE REVIEWED UNLESS NOTED OTHERWISE
NO EXCEPTION TAKEN
REVISE AS NOTED RESUBMISSION NOT REQUIRED
REVISE AS NOTED RESUBMISSION REQUIRED
REJECTED
X
Stantec
DATE 2/28/08
SIGNATURE TSK
REVIEW BY STANTEC IS FOR THE SOLE PURPOSE OF ASCERTAINING GENERAL CONFORMITY WITH DESIGN. CONTRACTOR IS RESPONSIBLE FOR DIMENSIONS, FABRICATION AND CONSTRUCTION METHODS, COORDINATION OF SUB-TRADES, DETAIL DESIGN OF COMPONENTS, AND ERRORS OR OMISSIONS ON SHOP DRAWINGS.

| REV. | | BY | DATE | CK'D | DATE |
|---|---|---|---|---|---|
| 1 | MADE KEYWAY PARALLEL TO GIRDER CENTER-LINE & SHOWED LIMITS OF ST. STL. & AS NOTED PER APPROVERS COMMENTS | MCM | 2/14/08 | MCM | 2/14/08 |

STATE OF VERMONT
AGENCY OF TRANSPORTATION

EAST ROAD OVER
VT ROUTE 279
TOWN OF BENNINGTON
BRIDGE NO. B11
PROJECT NO. AC NH 019-1(53)

COSMEC, INC.
70 SOUTH STREET
WALPOLE, MA. 02081

| SCALE: 3/16"=1" | DRAWN BY: MCM | CHECKED BY: MM |
|---|---|---|
| DATE: | DATE: 1/7/08 | DATE: 1/9/08 |

COSMEC POT BEARINGS

| CUSTOMER | S.O. NUMBER | DRAWING NUMBER | REV. |
|---|---|---|---|
| J. A. McDONALD, INC. | 60775 | 5242 | 1 |