REVISED
4-3-2009

Metric

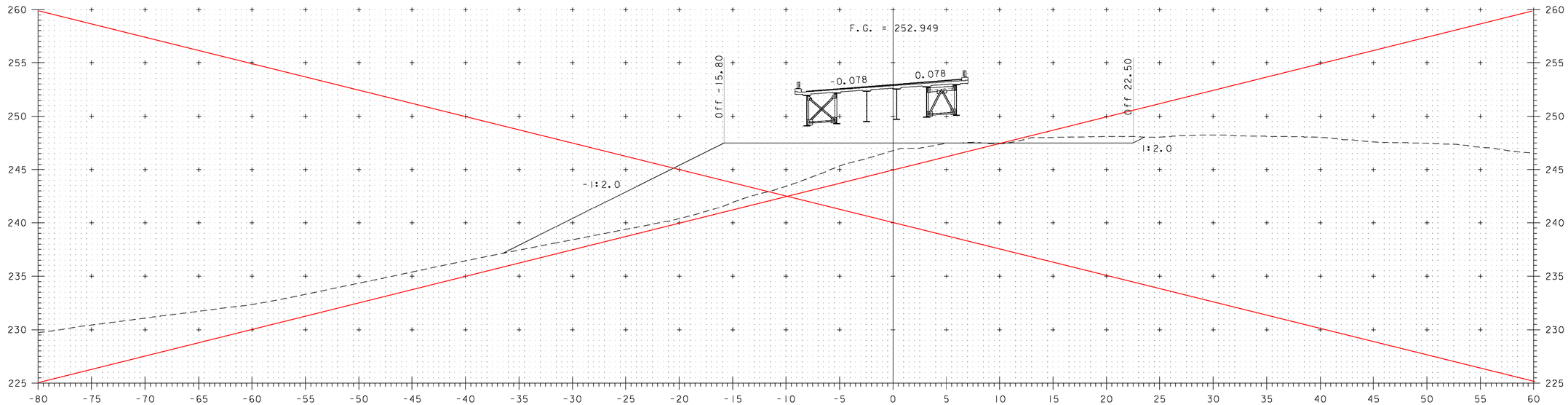

NB 8+680

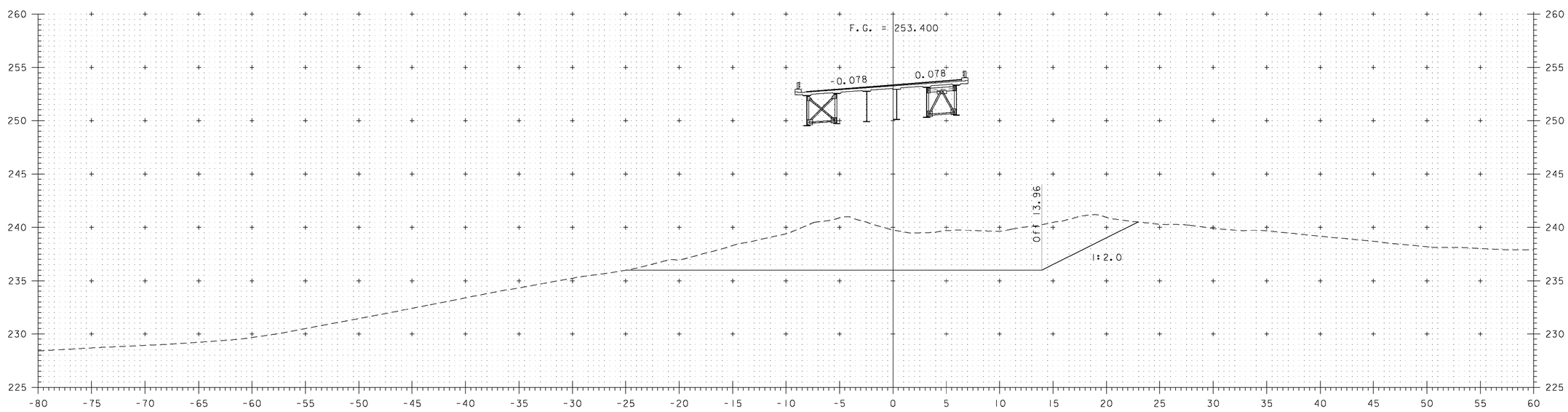

NB 8+660

NOTE:
ELEVATIONS SHOWN ARE FOR THE ULTIMATE FINISHED GRADE. THE TOP 50 PAVEMENT COURSE (TYPE IIIS) WILL BE CONSTRUCTED ON THE BRIDGE LIMITS. THIS CONTRACT INCLUDES FULL DEPTH PAVEMENT CONSTRUCTION ON BRIDGE LIMITS ONLY.

10 METERS
5
H 1:200 SCALE
V 1:200 SCALE
@ FULL SIZE
5 10 METERS

VERMONT AGENCY OF TRANSPORTATION

Stantec

PROJECT NAME: BENNINGTON
PROJECT NUMBER: AC NH 019-1(53)

FILE NAME: ...\zd307c3.revised.dgn
DESIGN SUPERVISOR: GREG EDWARDS
DESIGNED BY: MARC FOISY
NB MAINLINE CROSS SECTIONS 4

PLOT DATE: 4/10/2009
DRAWN BY: STANTEC
CHECKED BY: GARY SANTY
SHEET OF

V:\1953\active\19530002\transportation\drawing\contract_3\VerticalRevision\zd307c3.revised.dgn