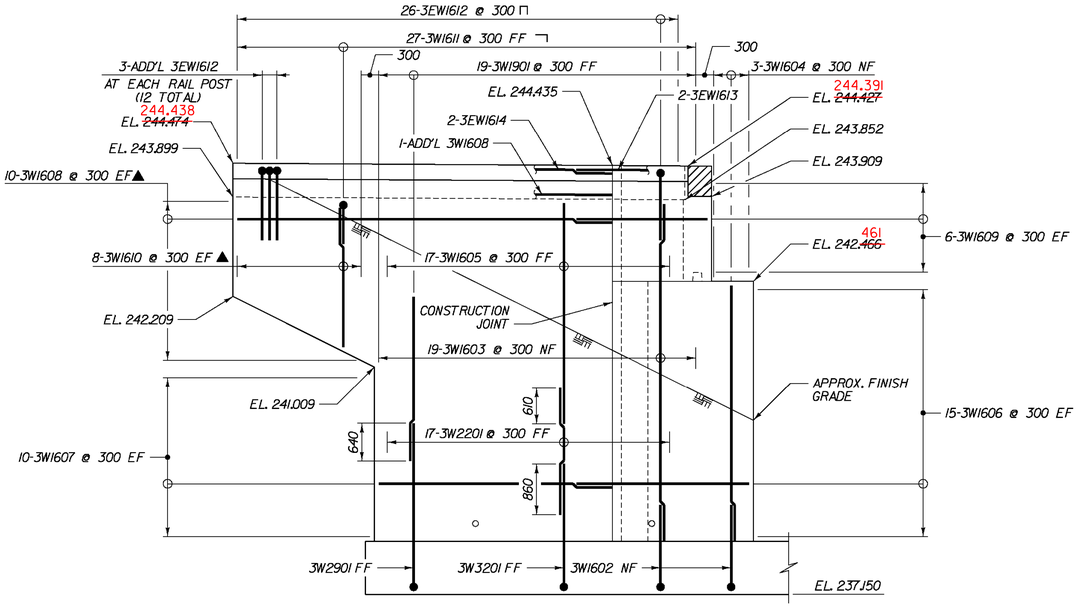

WINGWALL No. 3 ELEVATION

SCALE 1:50

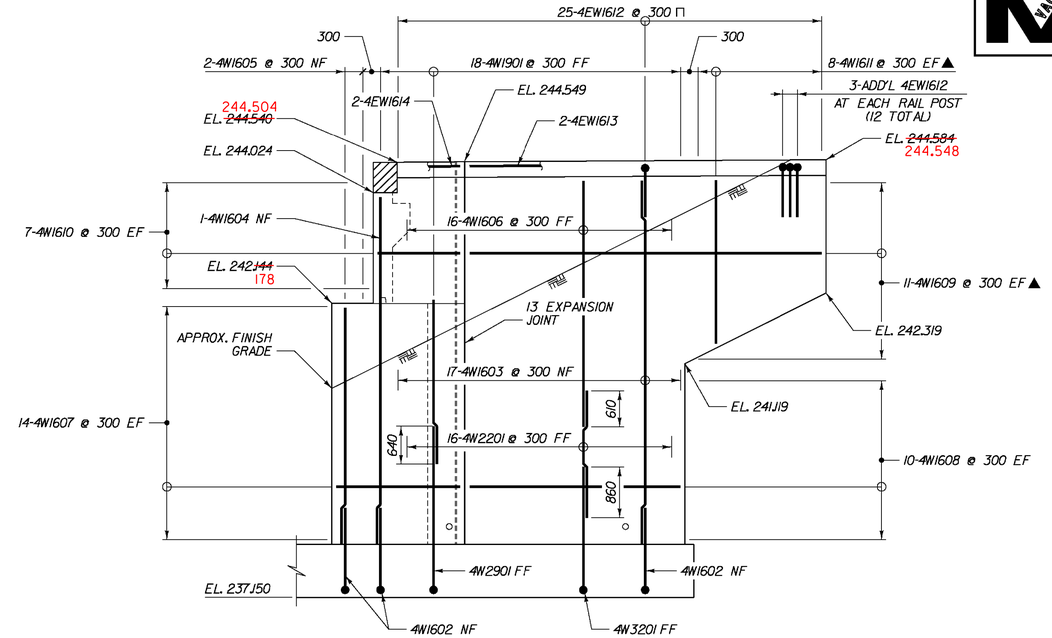

WINGWALL No. 4 ELEVATION

SCALE 1:50

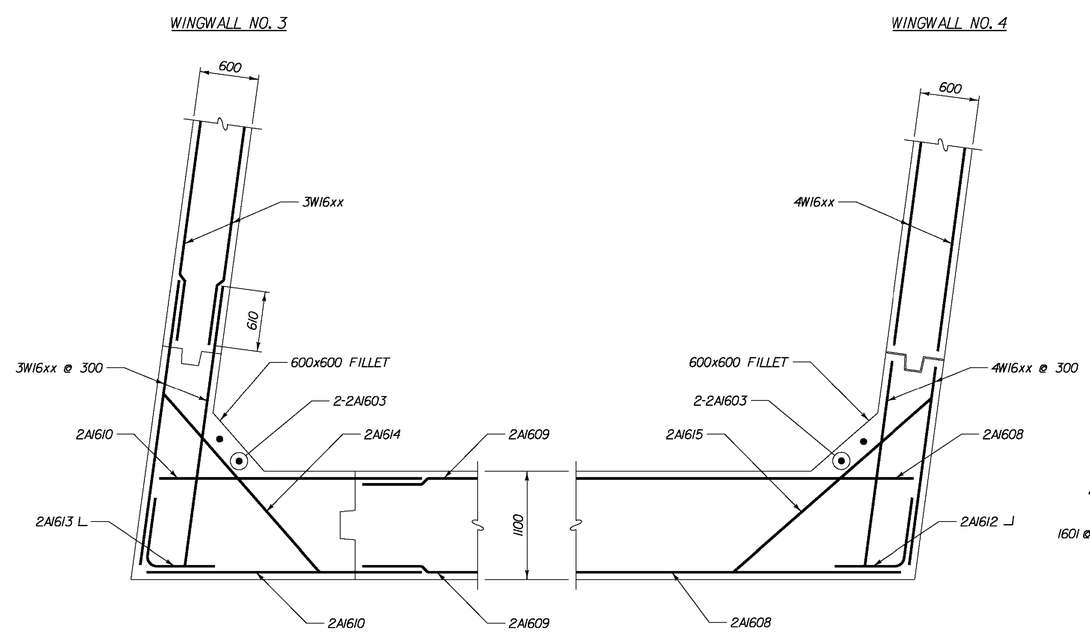

ABUTMENT 2 – CORNER REINFORCEMENT

(BELOW BEAM SEAT)

SCALE 1:30

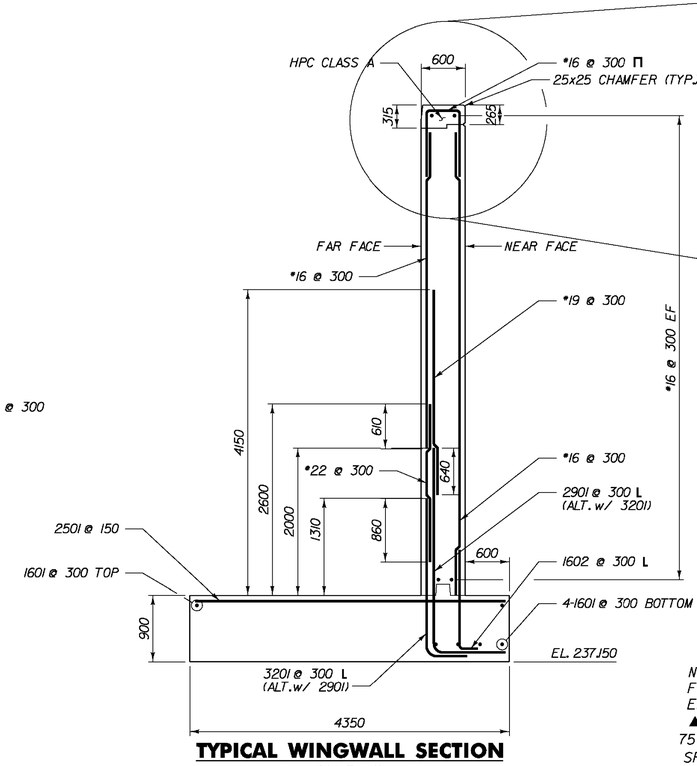

TYPICAL WINGWALL SECTION

SCALE 1:40

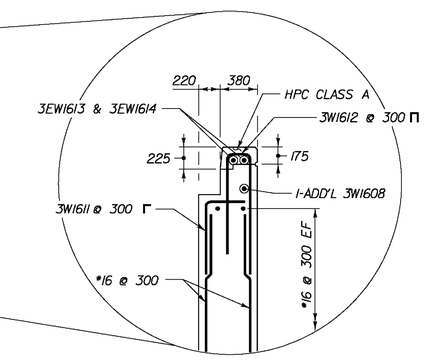

TOP OF WALL DETAIL AT WINGWALL 3

SCALE 1:30

NOTE:

NF = NEAR FACE
FF = FAR FACE
EF = EACH FACE
▲ = CUT TO FIT IN FIELD
75 CLR. UNLESS OTHERWISE SPECIFIED ON THE PLANS.

Stantec

STATE OF VERMONT
AGENCY OF TRANSPORTATION

Town Of BENNINGTON	Bridge No. B11
Highway No. TH 5	Log Sta. / Surv. Sta.
EAST ROAD OVER VT ROUTE 279	
ABUTMENT 2 WINGWALL DETAILS	
Designed By S. BURBANK	Drawn By J. SOTER
Checked By S. BURBANK — Date 03/06	Bridge Design Supervisor G. BOGUE — Date 03/07
PROJECT BENNINGTON	PROJECT NO. AC NH 019-1(53)
Dgn.: ...\Design\ER\ER-Abut2w.dgn	Plot Date: 5/25/2011
Bridge Sheet No. BR639	Sheet 286 of 577

V:\1953\active\195300002\transportation\structural\Design\ER\ER-Abut2w.dgn