Metric

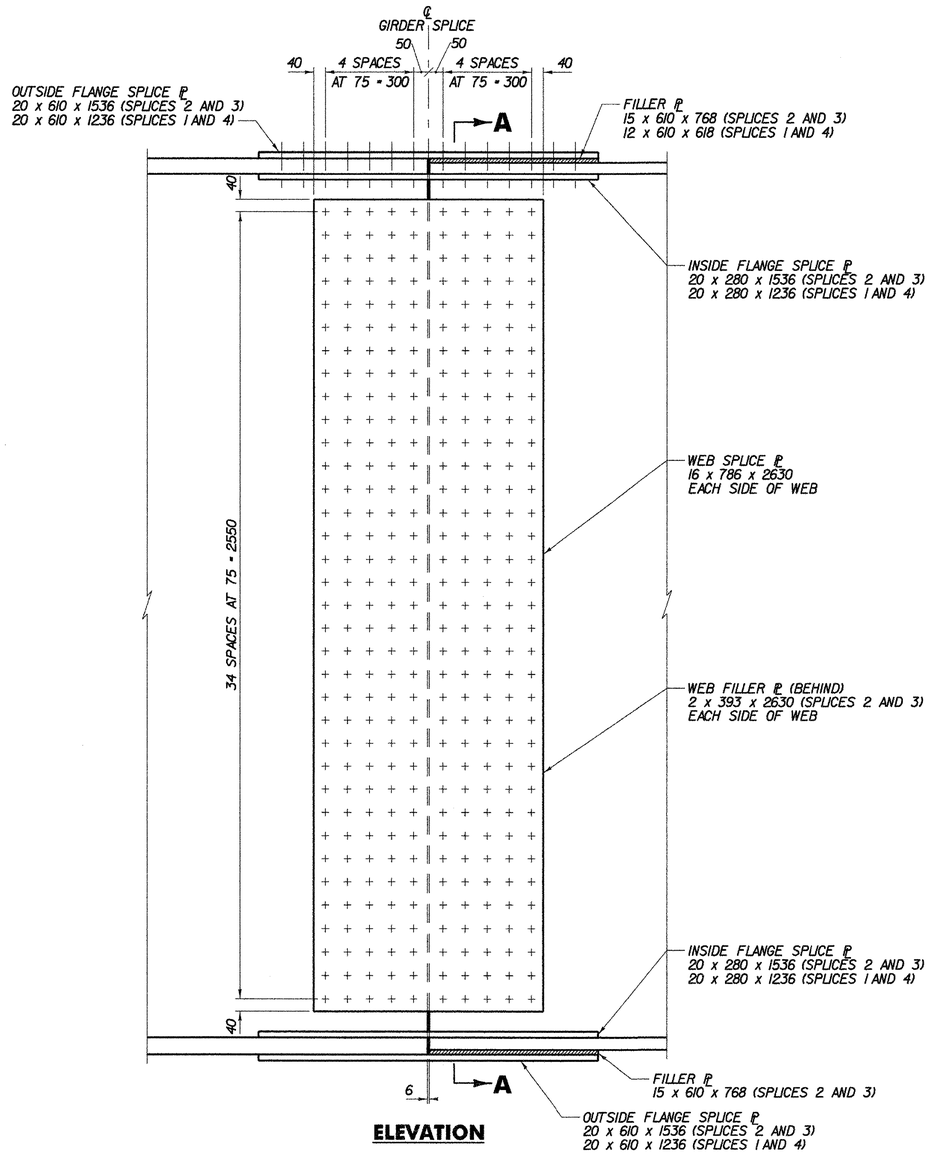

ELEVATION

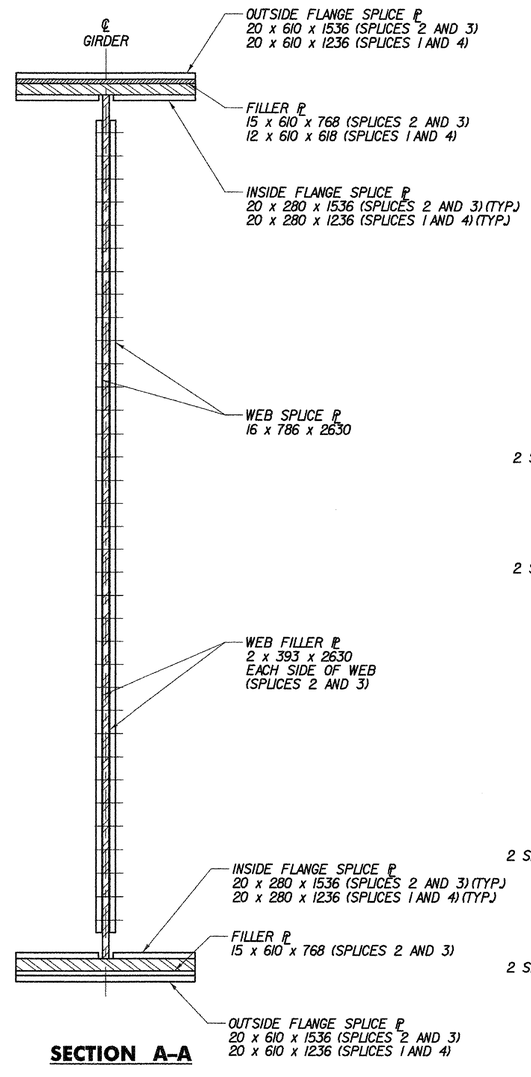

SECTION A-A

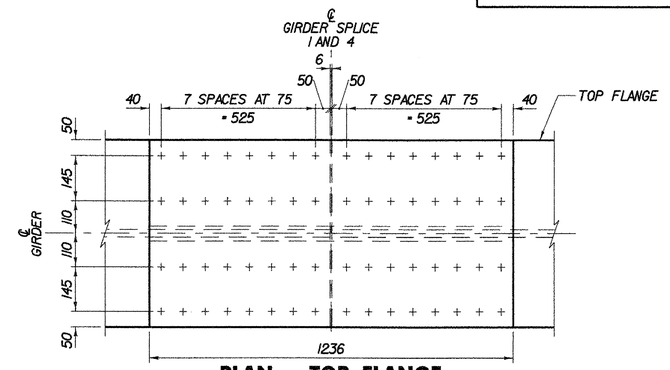

PLAN - TOP FLANGE
(SPLICES 1 AND 4)

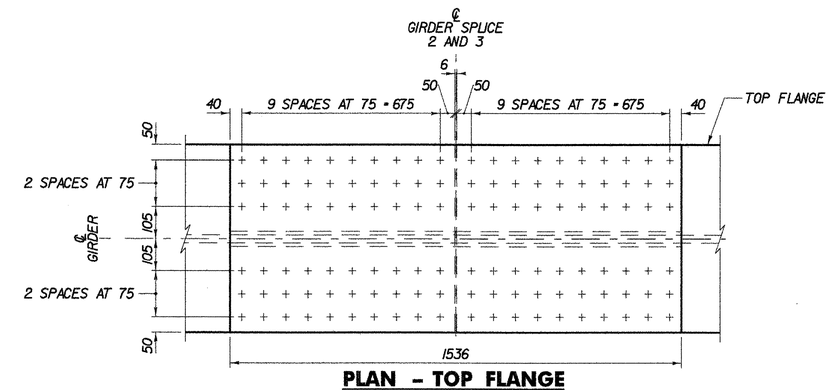

PLAN - TOP FLANGE
(SPLICES 2 AND 3)

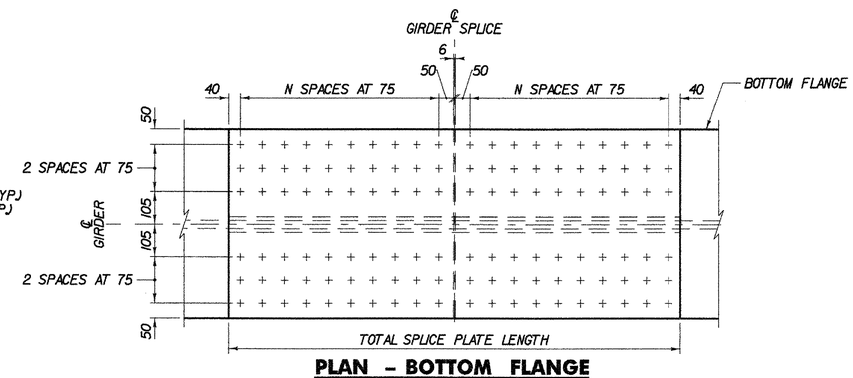

PLAN - BOTTOM FLANGE

NOTES:

1. BOLTS SHALL BE 22 DIAMETER AASHTO M164M TYPE 3 HIGH STRENGTH BOLTS IN 24 DIAMETER HOLES. NUTS AND WASHERS SHALL ALSO CONFORM TO AASHTO M164M. BOLT LENGTHS SHALL BE SUCH THAT THE BOLT THREADS ARE EXCLUDED FROM THE SHEAR PLANE.
2. ALL FIELD SPLICE CONNECTIONS SHALL BE "SLIP CRITICAL" WITH A CLASS B SURFACE (BLAST CLEAN SURFACE) FOR THE CONTACT SURFACES OF BOLTED PARTS.
3. STEEL FOR SPLICE AND FILLER PLATES SHALL BE AASHTO M270M/M270.
4. HOLES FOR FIELD SPLICES SHALL BE DRILLED IN THE SHOP WHILE GIRDERS ARE ASSEMBLED TO FIT BEARING ELEVATIONS.
5. ALL FLANGE AND WEB SPLICE PLATES SHALL BE CHARPY V-NOTCH TESTED IN ACCORDANCE WITH SECTION 714.01 OF THE SPECIFICATIONS.

FIELD SPLICE DETAILS

NOT TO SCALE

BOTTOM FLANGE SPLICE PLATE TABLE

SPLICE LOCATION	NUMBER OF BOLT SPACES -N-	TOTAL SPLICE PLATE LENGTH
1 AND 4	7	1236
2 AND 3	9	1536

SEE ALSO SHOP DRAWINGS

TVGA CONSULTANTS

STATE OF VERMONT
AGENCY OF TRANSPORTATION

Town Of	BENNINGTON	Bridge No.	BI2
Highway No.	VT RTE 279	Log Sta. / Surv. Sta.	
VT ROUTE 279 OVER FURNACE BROOK			
SPLICE DETAILS			
Designed By J.J. MANUSE		Drawn By D.S. URBINO	
Checked By B.J. CARLSON	Date 04/07	Bridge Design Supervisor K.M. WOJTKOWSKI	Date 04/07
PROJECT BENNINGTON		PROJECT NO. AC NH F019-1(53)	
TVGA CAD Drawing No. FBSpliceDet.dgn		Date 04/10/2007	
Bridge Sheet No. BR522		Sheet 214 of 577	