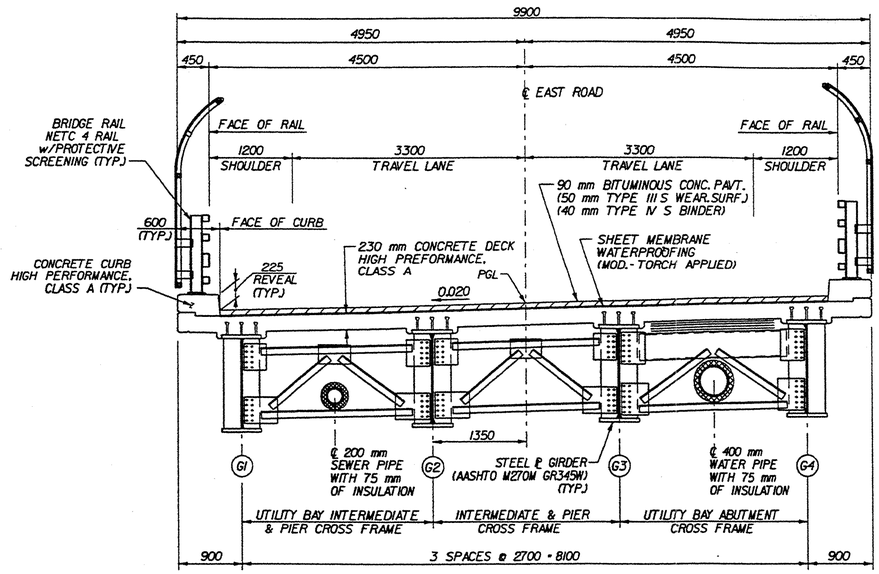

BRIDGE TYPICAL SECTION

SCALE 1:40

NOTE: ALL DIMENSIONS ARE RADIAL AND CONCENTRIC WITH ℄ EAST ROAD.

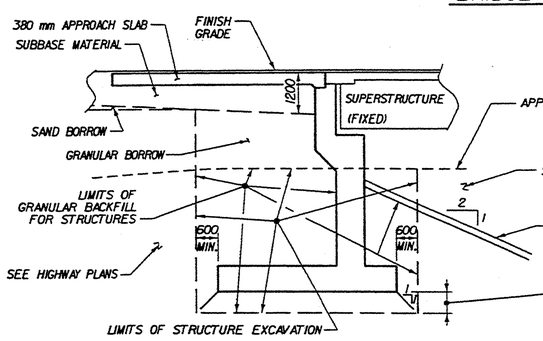

TYPICAL ABUTMENT 1 SECTION

NOT TO SCALE

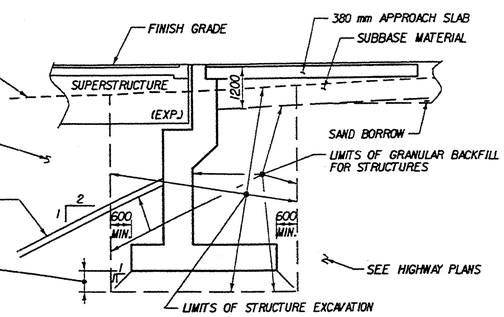

TYPICAL ABUTMENT 2 SECTION

NOT TO SCALE

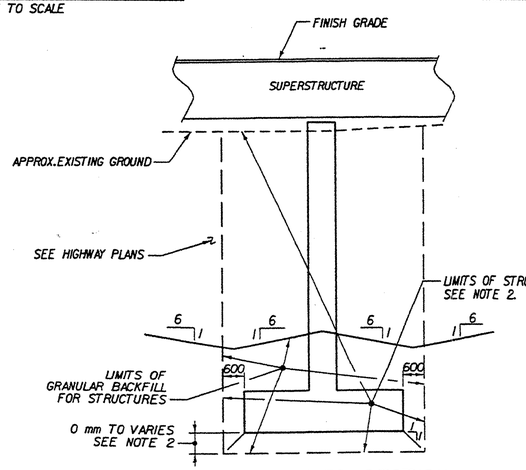

TYPICAL PIER SECTION

NOT TO SCALE

INDEX OF SHEETS

BR600	PRELIMINARY INFORMATION SHEET
BR601	PLAN AND ELEVATION
BR602-603	BORING INFORMATION SHEETS
BR604-612	BORING LOGS
BR613	VT ROUTE 279 PROFILES
BR614	PIER ELEVATION

NOTES:

1. ALL DIMENSIONS ARE IN MILLIMETERS (mm) UNLESS OTHERWISE NOTED.
2. SUBGRADE AREAS BENEATH FOOTINGS EXHIBITING EXCESSIVE WEAVING OR SOFT OR UNSTABLE SOILS SHALL BE REMOVED AS STRUCTURE EXCAVATION AND REPLACED WITH GRANULAR BACKFILL FOR STRUCTURES. ADDITIONAL FOUNDATION CONSTRUCTION REQUIREMENTS ARE OUTLINED IN SECTION 8.0 OF THE GEOTECHNICAL ENGINEERING REPORT, DATED SEPTEMBER 2000, BY GZA GEOENVIRONMENTAL, INC.

FINAL HYDRAULICS REPORT

VAOT Metric

HYDROLOGIC DATA

DRAINAGE AREA= ____
CHARACTER OF TERRAIN: ____
CHARACTER & TYPE OF STREAM: ____
NATURE OF STREAMBED: ____

Q2.33= ____ cms Q50= ____ cms
Q10= ____ cms Q100= ____ cms
Q25= ____ cms Q500= ____ cms

DATE OF FLOOD OF RECORD: ____
WATER SURFACE ELEV.: ____ ESTIMATED DISCHARGE: ____
NATURAL STREAM VELOCITY @ Q50 = ____ mps
ICE CONDITIONS: ____ DEBRIS: ____
DOES THE STREAM REACH MAXIMUM HIGHWATER ELEVATION RAPIDLY? ____
IS ORDINARY RISE RAPID? ____
IS STAGE AFFECTED BY UPSTREAM OR DOWNSTREAM CONDITIONS? ____
IF YES, DESCRIBE. ____

WATERSHED STORAGE ____ HEADWATERS ____ UNIFORM THROUGHOUT WATERSHED ____ IMMEDIATELY ABOVE SITE ____

EXISTING STRUCTURE

STRUCTURE TYPE: N/A YEAR BUILT: N/A
CLEAR SPAN (NORMAL TO STREAM): N/A
VERTICAL CLEARANCE ABOVE STREAMBED: N/A
WATERWAY OF FULL OPENING: N/A
DISPOSITION OF STRUCTURE: N/A

TYPE OF MATERIAL UNDER SUBSTRUCTURE: N/A

WATER SURFACE ELEV. @ Q2.33: ____ VELOCITY: ____ mps
Q10: ____ " ____ mps
Q25: ____ " ____ mps
Q50: ____ " ____ mps
Q100: ____ " ____ mps

LONG TERM STREAM BED CHANGES: N/A

IS THE ROADWAY OVERTOPPED BELOW THE Q100? N/A FREQUENCY: N/A
RELIEF ELEVATION: N/A DISCHARGE OVER ROAD @ Q100: N/A

UPSTREAM STRUCTURE: TOWN: N/A DISTANCE: ____
HIGHWAY NO.: ____ STRUCTURE NO.: ____
STRUCTURE TYPE: ____
CLEAR SPAN: ____ CLEAR HEIGHT: ____
YEAR BUILT: ____ FULL WATERWAY: ____

* DOWNSTREAM STRUCTURE: TOWN: N/A DISTANCE: ____
HIGHWAY NO.: ____ STRUCTURE NO.: ____
STRUCTURE TYPE: ____
CLEAR SPAN: ____ CLEAR HEIGHT: ____
YEAR BUILT: ____ FULL WATERWAY: ____

* (COMPLETE INFORMATION WILL BE PROVIDED ON FINAL PLANS)

PROPOSED STRUCTURE

STRUCTURE TYPE: Two span continuous curved plate girder bridge

CLEAR SPAN (NORMAL TO STREAM): N/A
VERTICAL CLEARANCE ABOVE STREAMBED: N/A
WATERWAY OF FULL OPENING: N/A

WATER SURFACE ELEV. @ Q2.33: ____ VELOCITY: ____ mps
Q10: ____ " = ____ mps
Q25: ____ " = ____ mps
Q50: ____ " = ____ mps
Q100: ____ " = ____ mps

IS THE ROADWAY OVERTOPPED BELOW THE Q100? N/A FREQUENCY: N/A
RELIEF ELEVATION: N/A DISCHARGE OVER ROAD @ Q100: N/A

AVERAGE LOW ELEVATION OF SUPERSTRUCTURE: ____
VERTICAL CLEARANCE @ Q 100 = ____ m

SCOUR: Channel = N/A
REQUIRED CHANNEL PROTECTION: N/A

PERMIT INFORMATION

AVERAGE DAILY FLOW: N/A
ORDINARY LOW WATER: ____ cms ELEV.: ____
ORDINARY HIGH WATER: ____ cms ELEV.: ____

TEMPORARY BRIDGE REQUIREMENTS

STRUCTURE TYPE: N/A
CLEAR SPAN (NORMAL TO STREAM): N/A
VERTICAL CLEARANCE ABOVE STREAMBED: N/A
WATERWAY OF FULL OPENING: N/A

DESIGN CRITERIA:

1. DESIGN LIVE LOAD AASHTO MS-22.5
2. DESIGN SPAN 38.9 m + 32.9 m = 71.8 m
3. ALLOWABLE LOAD FOR SPREAD FOOTINGS ON SOIL 383 kPa (Abut. 1, Pier & Abut. 2) ON LEDGE N/A
4. ALLOWABLE LOAD FOR PILING N/A TYPE N/A ESTIMATED LENGTH N/A
5. STRUCTURAL STEEL AASHTO GRADE M270M GR345W
6. REINFORCING STEEL GRADE 420
7. CONCRETE, HIGH PERFORMANCE CLASS A f'_c : 30 MPa
   CONCRETE, HIGH PERFORMANCE CLASS B f'_c : 25 MPa

TRAFFIC MAINTENANCE:

1. IS TRAFFIC TO BE MAINTAINED? YES IF YES, ON EXISTING STRUCTURE NO OR ON TEMPORARY BRIDGE TEMPORARY DETOUR
2. TEMPORARY BRIDGE REQUIREMENTS: ONE OR TWO WAY N/A TRAFFIC CONTROL SIGNALS REQUIRED N/A
   MINIMUM CLEAR SPAN (NORMAL TO STREAM): N/A VERTICAL CLEARANCE ABOVE STREAMBED: N/A
   WATERWAY AT FULL OPENING: N/A
   ARE SIDEWALKS REQUIRED? N/A IF SO, ON WHAT SIDE? N/A

LOAD RATING (TONS)

LOADING LEVELS (LOAD FACTOR)	TRUCK						
	H	HS	3S2	6 AXLE	3A. STR.	4A. STR.	5A. SEMI
INVENTORY A = 2.17			■	■	■	■	■
POSTED A = 1.55				■			
OPERATING A = 1.30	■						■

$$RF = \frac{\phi M_N - 1.3\, M_{DL}}{A \times M_{LL+I}}$$

STATE OF VERMONT
AGENCY OF TRANSPORTATION

Town Of BENNINGTON	Bridge No.
	Log Sta.
Highway No.	Surv. Sta.

EAST ROAD OVER VT ROUTE 279

PRELIMINARY INFORMATION SHEET

Designed By S. BURBANK	Drawn By A. THIBAULT
Checked By M. CHENETTE Date 11/04	Bridge Design Supervisor G. BOGUE Date
PROJECT BENNINGTON	PROJECT NO. NH F019-1(5)
DH CAD Drawing Name: ...\PlotFiles\ER\ER-PBSht.dgn Plot Date: 11/18/2004	
Bridge Sheet No. BR600	Sheet 28 of 112

Dufresne-Henry

K:\6380020 (Benn)\Structures\PlotFiles\ER\ER-Pbsht.pff