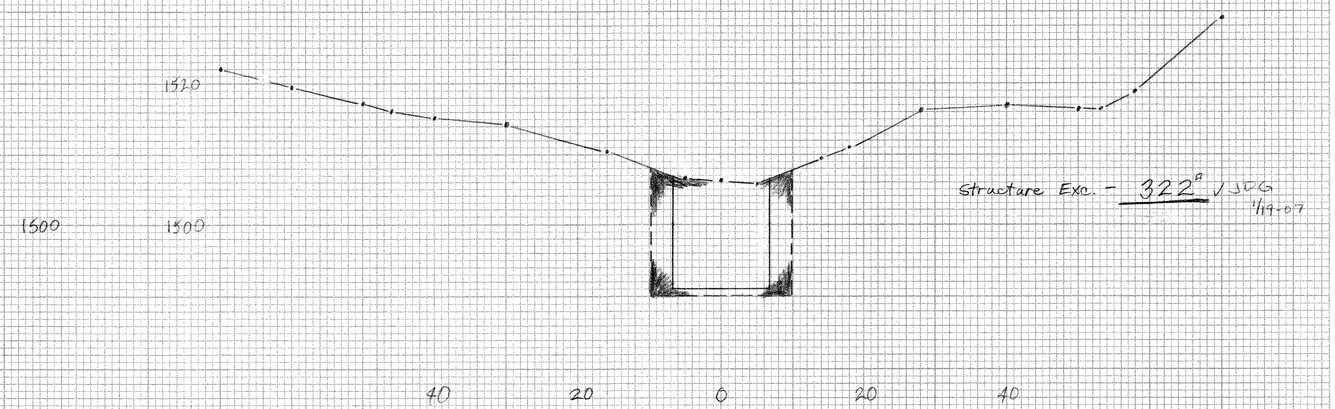

Channel Line Sta. 12+72 Ahead - Cut-Off Wall Exc. Limits
Use section & quantity also for Sta. 12+73.40 - Intersection of anchor excavation limits

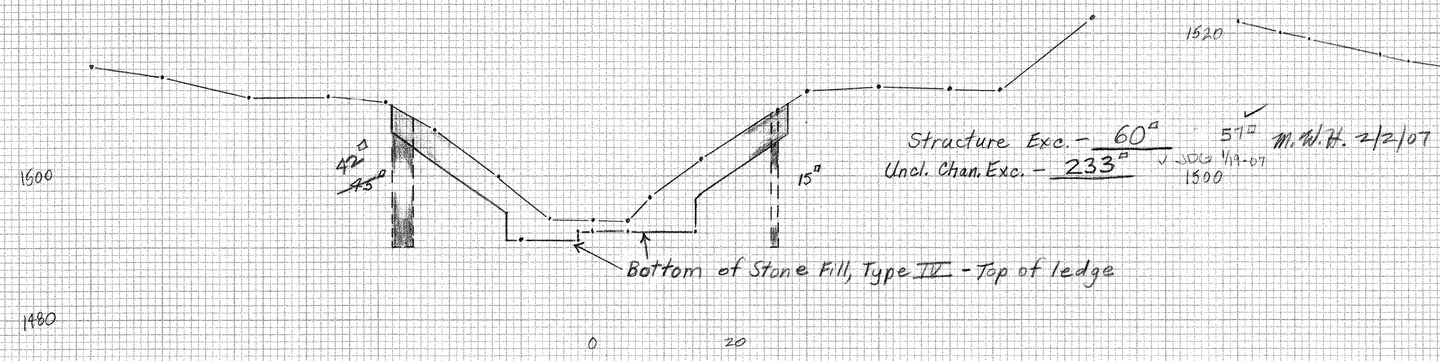

Channel Line 12+96.20

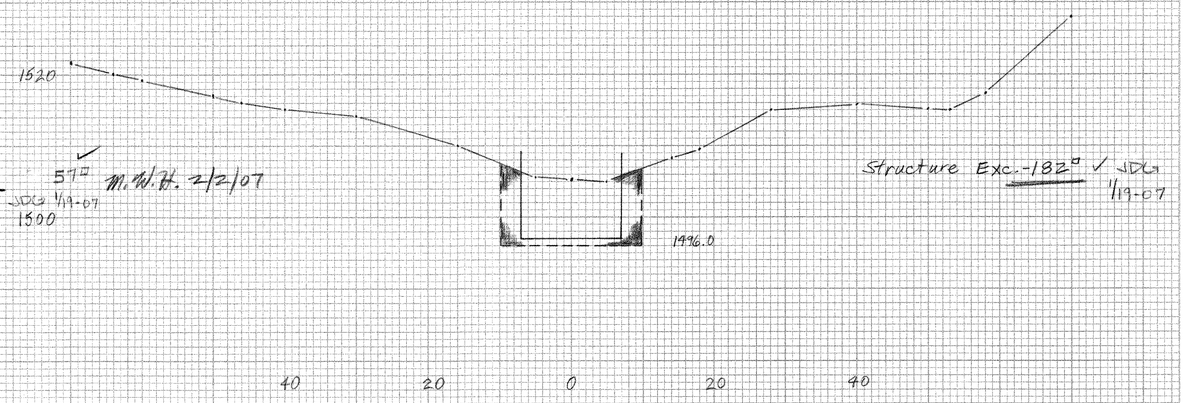

Channel Line 12+72 Back

Whitingham STP ST CULV(6)
Structure Exc. Cross-Sections
Chan. Line Sta. 12+72 Back & Ahead, 12+96.20
Plotted by M. Hanghwout 12/22/06

Sheet 10B of