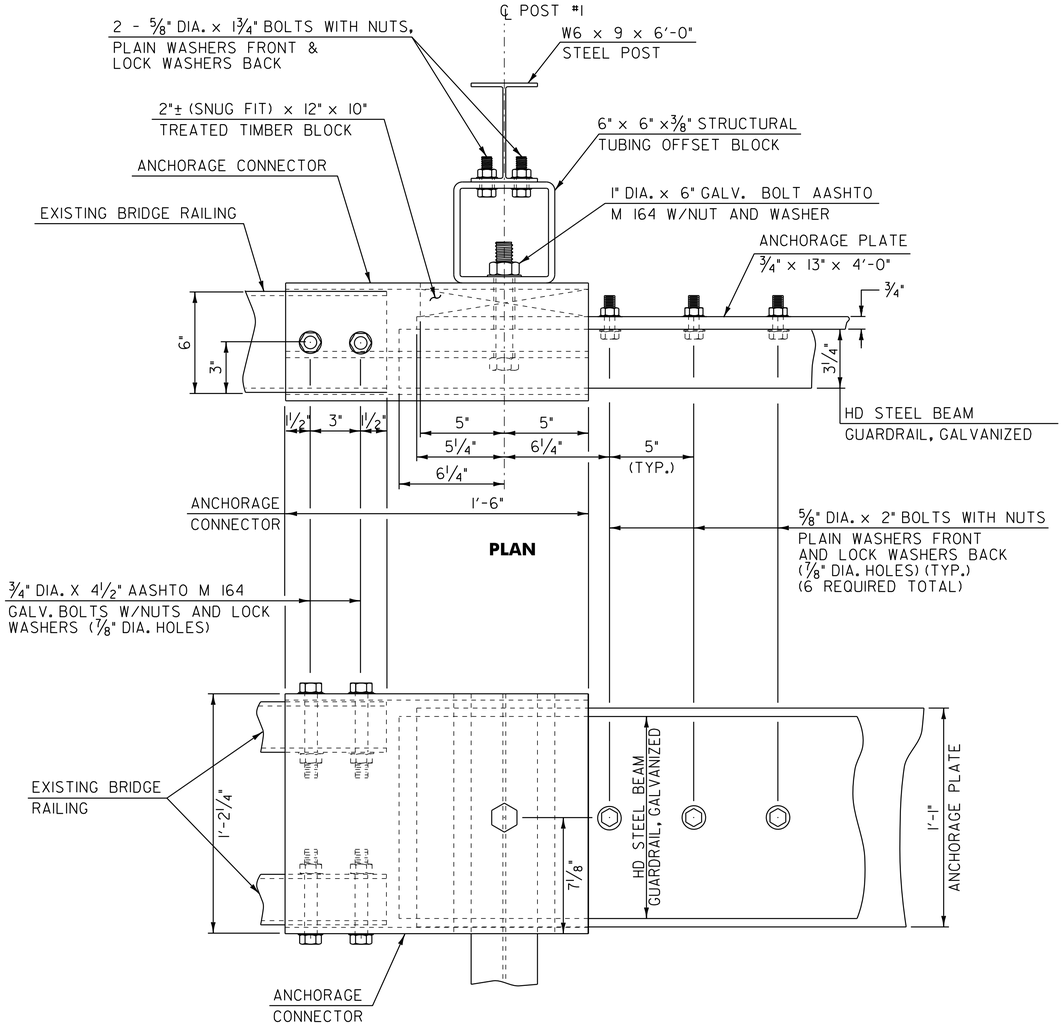

ELEVATION

CONNECTION DETAILS AT POST #1

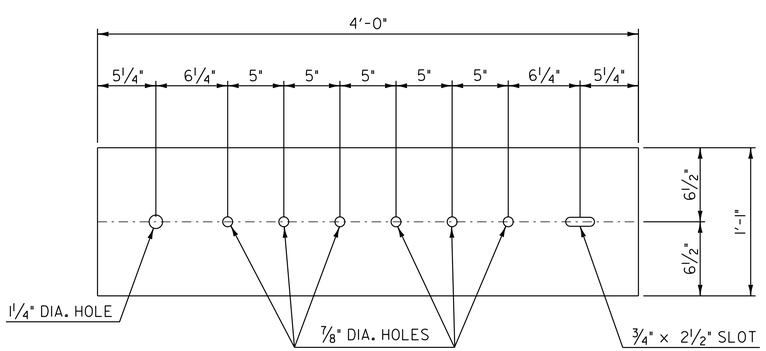

ANCHORAGE PLATE DETAIL

NOTES

1. REFER TO STANDARD G-1 FOR ADDITIONAL RAIL DETAILS.
2. ALL POSTS FOR HD STEEL BEAM GUARDRAIL SHALL BE STEEL IN ACCORDANCE WITH SECTION 728 "GUARDRAIL, GUIDE POSTS AND BARRIERS" UNLESS OTHERWISE SPECIFIED IN THE CONTRACT.
3. APPROACH RAIL SPLICES SHALL LAP IN DIRECTION OF TRAFFIC FLOW.
4. ANCHORAGE CONNECTOR AND ANCHORAGE PLATE SHALL BE AASHTO M 270, GRADE 250 GALVANIZED TO AASHTO M 111 AFTER FABRICATION.
5. ALL BOLTS, NUTS AND WASHERS SHALL BE AASHTO M 164 GALVANIZED TO AASHTO M 232 AFTER FABRICATION.
6. STRUCTURAL TUBING OFFSET BLOCK SHALL BE AASHTO M 183 GALVANIZED TO AASHTO M 111 AFTER FABRICATION.
7. APPROACH RAILING SHALL BE HD STEEL BEAM FOR 50'-0" FROM THE ℄ OF POST #1 FOR TYPE I AND 12'-6" FROM THE ℄ OF POST #1 FOR TYPE II.
8. ALLOWABLE DIMENSIONAL TOLERANCE FOR BENT SECTIONS IS ±1/16".
9. THE CONTRACT UNIT PRICES BID FOR EITHER TYPE OF GUARDRAIL APPROACH SECTION SHALL INCLUDE ANCHORAGE CONNECTOR, ANCHORAGE PLATE, HEAVY DUTY STEEL BEAM GUARDRAIL, POSTS, OFFSET BLOCKS, BLOCKING, BOLTS, AND ALL NECESSARY HARDWARE.

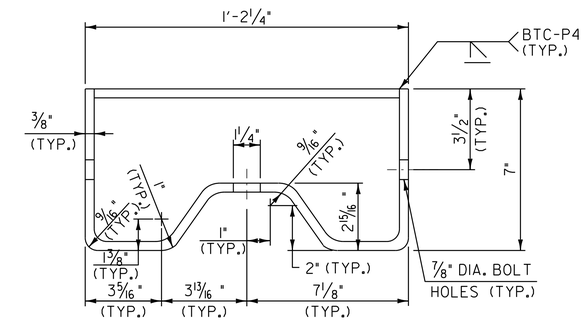

ANCHORAGE CONNECTOR DETAIL

(SEE NOTE 8)

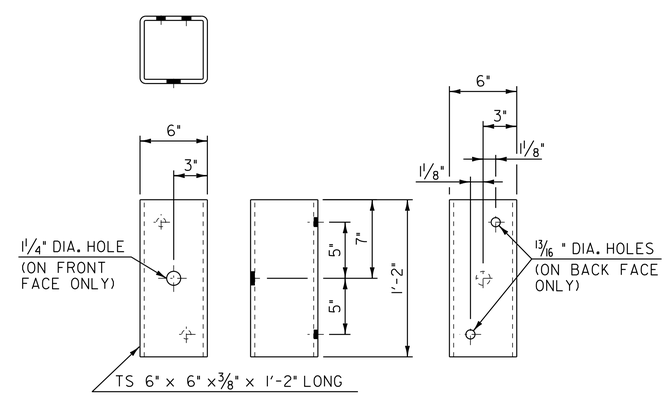

STRUCTURAL TUBING OFFSET BLOCK DETAILS

(OCCURS AT POST #1 WHEN USING APPROACH RAIL UTILIZING STEEL POSTS)

NOT TO SCALE

GUARDRAIL APPROACH SECTION DETAIL SHEET #2	PROJECT NAME: ROCHESTER-CH 11 IENDEN-ROCHESTER PROJECT NUMBER: SIP 2505(1)S
	FILE NAME: p05c046.dgn — PLOT DATE: $DATE$ PROJECT LEADER: D.E.G. — DRAWN BY: C.A.K. DESIGNED BY: J.S.P. — CHECKED BY: D.E.G. IPARM FILE: p05c046gd2.i — SHEET 47 OF 56