STATE OF VERMONT
AGENCY OF TRANSPORTATION

TRAFFIC SIGN SUMMARY SHEET

MILEMARKER, STATION, OR SIGN NUMBER	SIGN LEGEND	SIGN DIMENSIONS EA	WIDTH (in)	HEIGHT (in)	NEW & SALVAGED SIGNS "A"	"B"	SALV SIGN	SALV TIS	EXIST POST RETAIN	SALVAGE	NEW SIGN POSTS NO. OF POSTS	FLANGED CHANNEL lb/ft 1.12	2.0	3.0	SQUARE STEEL (in) lb/ft 1.75 1.88	2.0 2.16	2.5 3.35	ANCHOR	SLEEVE	TUBULAR ALUMINUM Ø (in) lb/ft 3.0 1.3	4.0 1.7	4.0 MOD 1.7	TUBULAR STEEL Ø (in) FOUNDATION	lb/ft 3.0 7.6	3.5 9.0	4.0 10.8	5.0 14.6	W-SHAPE STEEL FTG. SIZE 24"	30"	WEIGHT	POST SIZE	SIGN REQUIRED	REMARKS	SIGN DETAIL DETAIL ON SHEET NUMBER	STD. SHEET NUMBER
												OPTION ITEMS																							
203+86 RT		2	48	24	16.00						4			X																			W1-6		E-152
205+95 LT		1	36	36	9.00						2			X																			W3-5	SEE SHEET 41	
198+60 RT 207+30 LT	SLIDE AREA	2								2																							SAVE FOR DISTRICT #7	SEE SHEET 41	
198+60 RT 207+30 LT	NEXT 500 FT	2								2																							SAVE FOR DISTRICT #7	SEE SHEET 41	
SHEET 2					25.00									84																					
SHEET 1					52.25									140																					

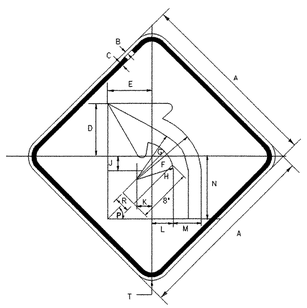

WI-2MB L

SIGN	DIMENSIONS (INCHES) A	B	C	D	E	F	G	H	J	K	L	M	N	P	R	T
MIN.	30	1/2	3/4	9 3/4	7 1/2	9 7/8	7 7/8	5 7/8	2 1/4	2 1/4	3 1/2	4	9 3/4	45°	2 5/8	1 7/8
STD.	36	5/8	7/8	12 1/8	9 3/8	12 1/4	9 3/4	7 1/4	2 7/8	3	4 3/8	5	12 1/8	45°	3	2 1/4
EXPWY.	48	3/4	1 1/4	17	13 1/8	17	13 1/2	10	3 5/16	4	6	7	17	45°	4	3

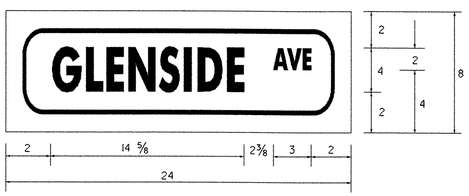

1 1/2 RADIUS
3/8 BORDER INDENT

W16-8

DIMENSIONS (INCHES)

* OPTICALLY SPACE NUMERALS ABOUT VERTICAL CENTERLINE.

R2-1

SIGN	DIMENSIONS (INCHES) A	B	C	D	E	F	G	H	J	K	L
	18	24	3/8	5/8	3	3E	2	8E	1 1/2	7 3/16	5 1/2

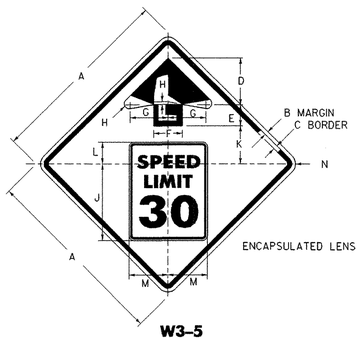

W3-5

COLORS
BORDER AND ARROW - BLACK
SYMBOL - R2-1
SYMBOL - WHITE BORDER ON RED BACKGROUND (RETROREFLECTIVE)

SIGN	DIMENSIONS (INCHES) A	B	C	D	E	F	G	H	J	K	L	M	N
	36	5/8	7/8	9	3	6 1/2	8	3/4	15	10	9	9	2 1/4

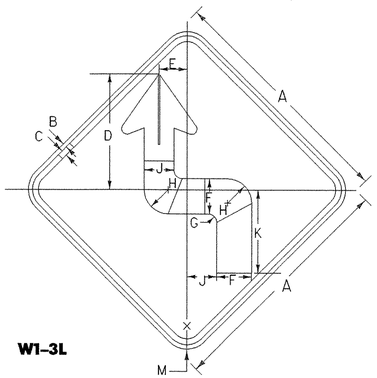

W1-3L

SIGN	DIMENSIONS (INCHES) A	B	C	D	E	F	G	H	J	K	L	M
	36	5/8	7/8	17 7/16	4 7/32	5 1/4	1 1/4	3 5/8	4 1/2	12 15/32	1 3/32	2 1/4

FINAL POST LENGTHS ARE TO BE DETERMINED IN THE FIELD. POST SIZES ARE COMPUTED BASED ON INFORMATION FURNISHED ON THE STANDARD SHEETS AND THE TRAFFIC & SAFETY DIVISION'S "SIGN POST DESIGN GUIDELINE."

							FT	FT	FT	FT	FT	FT		EA	LB	LB	LB		LB	LB	LB	LB			
TOTALS SHT 1 & 2	SF 77.25	SF	EA.	SF			FT 224			FT				LB				EA.	LB				EA.	EA.	LB

PROJECT NAME: HARDWICK
PROJECT NUMBER: STP ST 030-3(4)

FILE NAME: d04e060frm.dgn
PROJECT LEADER: A. BOMBARDIER
DESIGNED BY: M. NUTTER
IPARM NAME : d04e060tsh.i

PLOT DATE: 18-OCT-2005
DRAWN BY: M. NUTTER
CHECKED BY: A. BOMBARDIER
SHEET 31 OF 63