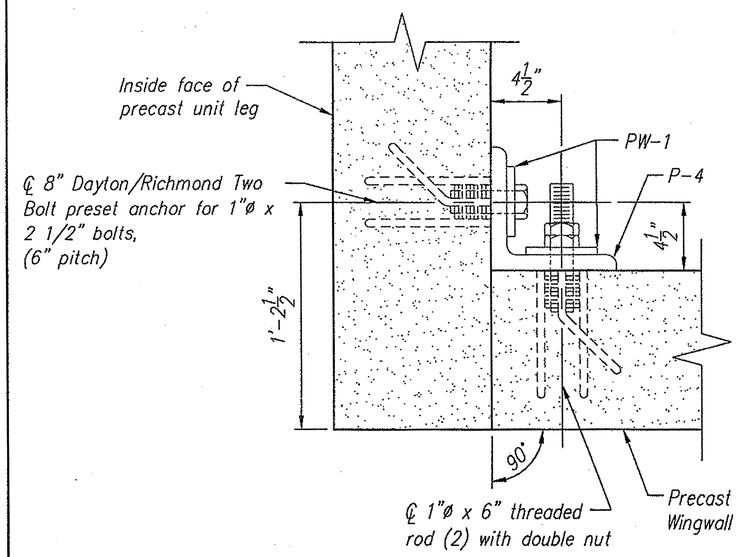

Plan View

Typical Connection Detail

APPROVAL ONLY:
NOT FOR CONSTRUCTION

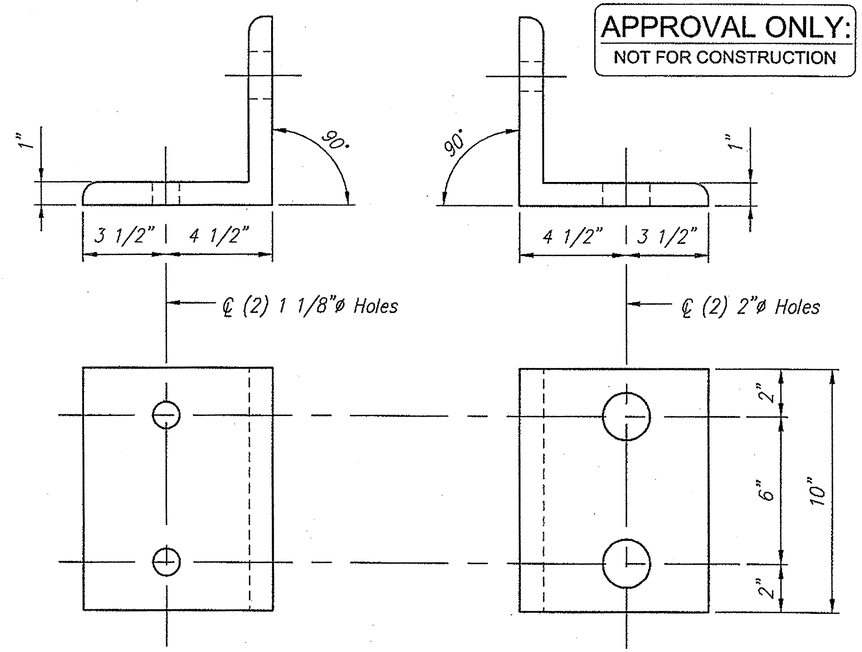

Unit Leg

Wingwall Leg

P-4

(∠ 8" x 8" x 1" x 10")
(Galvanized as per ASTM A153)

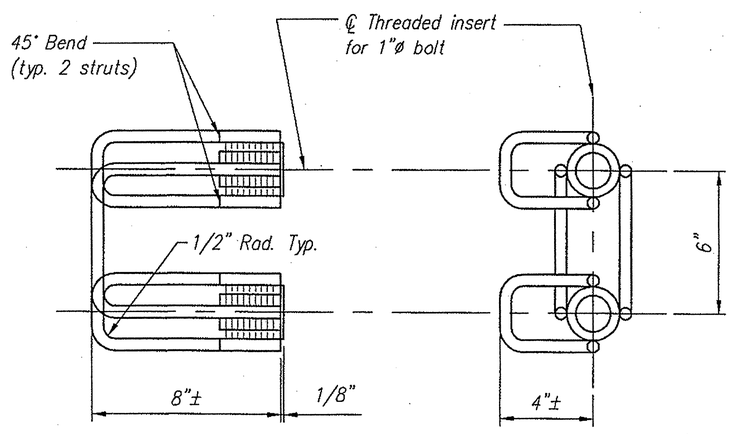

Side View

Front View

Dayton/Richmond Two Bolt Preset Anchor

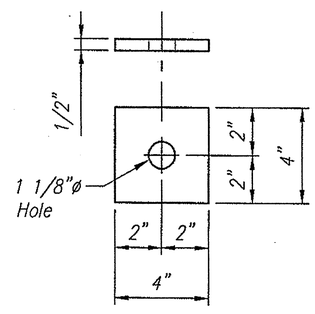

PW-1

(℞ washer, 1/2" x 4" x 4")
(Galvanized as per ASTM A153)

PLATE P-2

Total Required = 4
(4) PW-1 Req'd. per Plate

CON/SPAN® BRIDGE SYSTEMS
3100 Research Blvd.
P.O Box 20266
Dayton, Ohio 45420-0266
(800) 526-3999

© 2006

Offices
Dayton, OH (937) 254-2233
fax (937) 254-8365
Charlotte NC (704) 548-8420
Sacramento, CA (916) 787-8701
Albany, NY (518) 371-2871

CON/SPAN® is a patented system and the furnishing of this drawing does not constitute an express or implied license.

Revisions:

No.	Date
1	
2	
3	
4	

Sheet Title: WINGWALL CONNECTION PLATE SHOP DRAWING

VERMONT

BUELS GORE

MONTPELIER

Des. By: KJG	Job No. 14688
Drawn By: WLC	Sheet No. S25
Chk'd By: MRW	
Date: 8/25/06	067