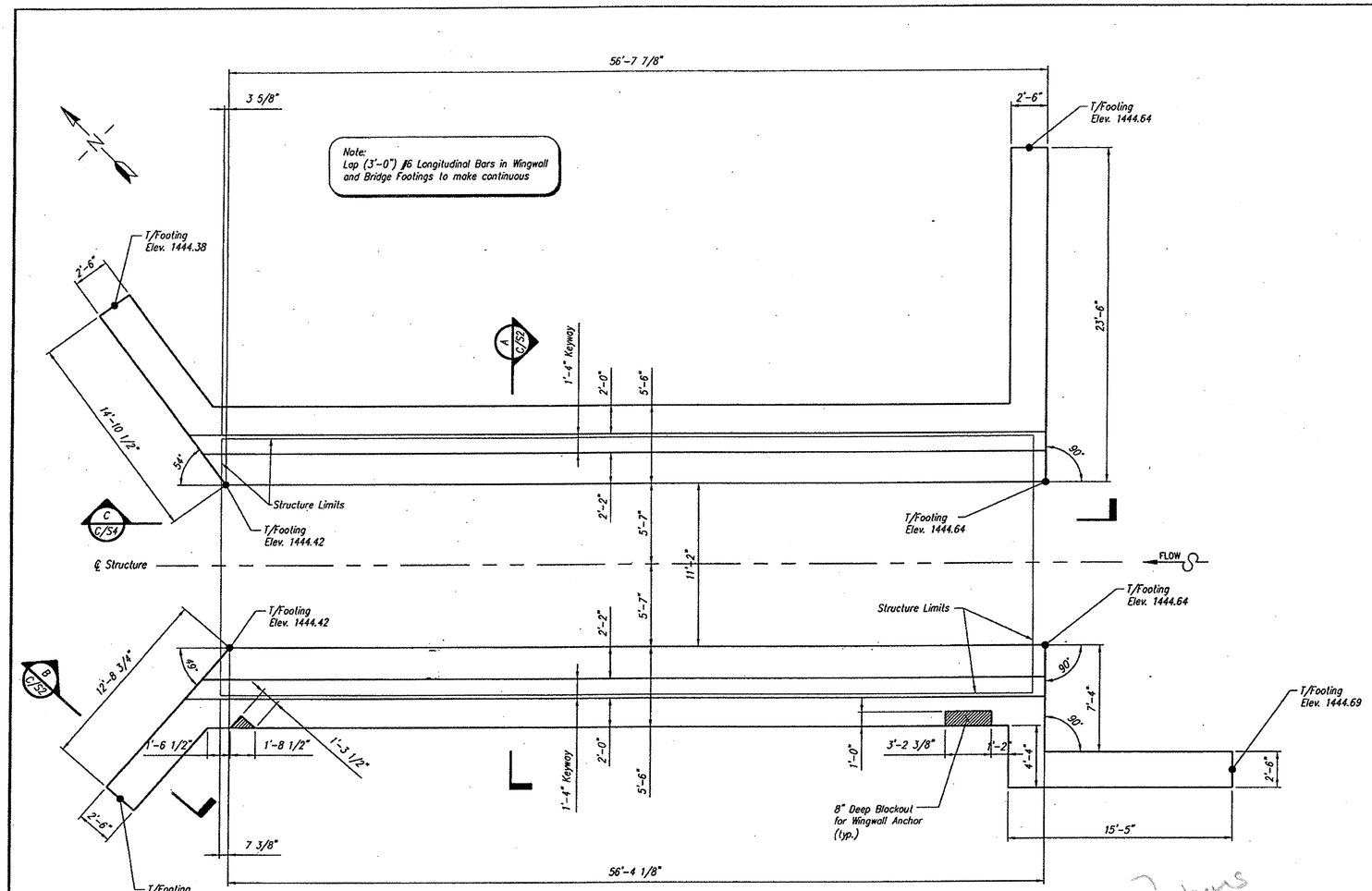

FOUNDATION PLAN

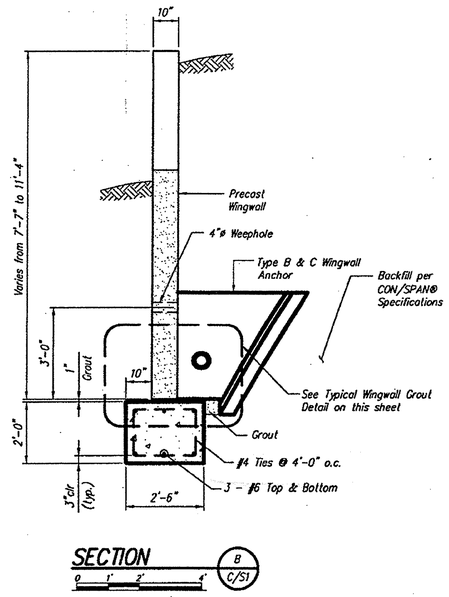

SECTION B C/S1

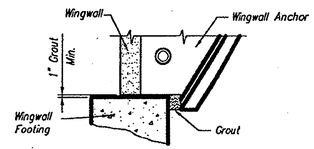

Notes:
- Minimum 1" Grout under wingwall leg & anchor stem.
- Area between wingwall footing and wingwall anchor shall be grouted solid before backfill.

TYPICAL WINGWALL GROUT DETAIL
not to scale

#4
#5
#6 } bars

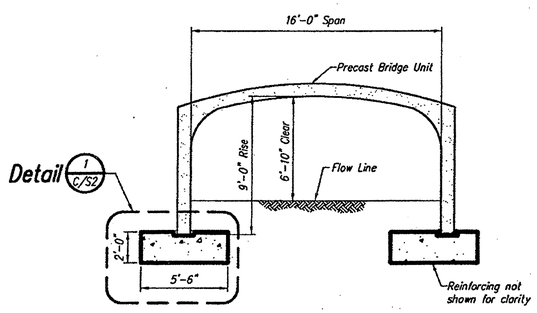

SECTION A C/S1

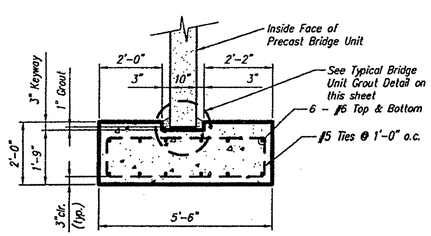

DETAIL 1 C/S2

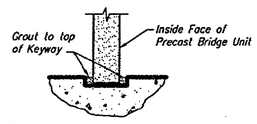

Note:
Fill entire keyway including nominal 1" void between bottom of keyway and bottom of precast bridge unit leg with grout.

TYPICAL BRIDGE UNIT GROUT DETAIL
not to scale

APPROVAL ONLY:
NOT FOR CONSTRUCTION

William D. Lockwood

7-17-06

NOTICE
© 2006. The design and information shown on this drawing is provided as a service to the project owner, engineer and contractor by CON/SPAN® Bridge Systems Ltd. No part of this drawing may be used, reproduced, or modified in any manner without the prior written authorization of CON/SPAN® Bridge Systems Ltd. Any such use, reproduction, or modification of this drawing is done at the user's own risk and the user agrees to indemnify, defend and hold harmless CON/SPAN® Bridge Systems Ltd. from and against any and all claims, liability, and expense, including, but not limited to, reasonable attorney's fees, arising from such use, reproduction or modification.

If discrepancies between the supplied information and actual field conditions are encountered as site work progresses, these discrepancies must be reported to CON/SPAN® Bridge Systems Ltd., immediately for re-evaluation of the design. CON/SPAN® Bridge Systems Ltd. accepts no liability for designs based on inaccurate information supplied by others.

The CON/SPAN® Bridge System is protected by one or more patents, patents pending and Trademarks.

No.	Date	REVISIONS
1		
2		
3		
4		
5		
6		
7		

Engineer's Seal

CON/SPAN® BRIDGE SYSTEMS
3100 Research Blvd. P.O. Box 20266 Dayton, Ohio 45420-0266
Offices
Dayton, OH (800) 526-3999 (937) 254-8365 FAX
Charlotte, NC (937) 254-2233 (704) 548-8586 FAX
Sacramento, CA (704) 548-8420 (916) 787-8723 FAX
Albany, NY (916) 787-8701 (518) 371-2872 FAX
(518) 371-2871

VERMONT

MONTPELIER

BUELS GORE

034

Designed KJG	C/S Project No. 14688
Drawn WLC	
Checked MRW	Sheet No. C/S2
Date 6/22/06	