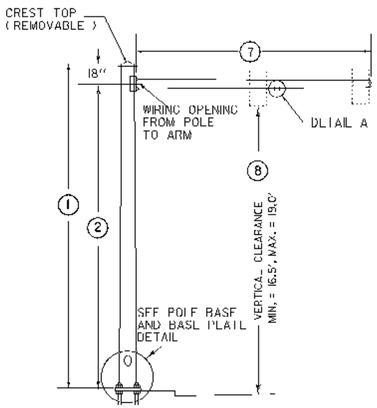


TYPE A

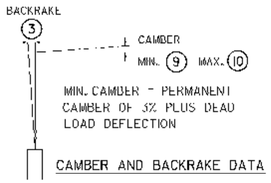


CAMBER AND BACKRAKE DATA

POLE BASE DIAMETER 4

POLE GAUGE 5

POLE TAPER RATE 6

ARM DIAMETER 11

ARM GAUGE 12

ARM TAPER RATE 13

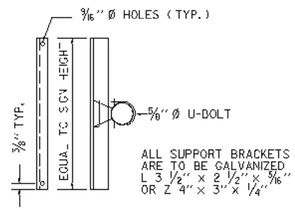


ALL SUPPORT BRACKETS ARE TO BE GALVANIZED L 3 1/2" X 2 1/2" X 5/16" OR Z 4" X 3" X 1/4"

SIGN ON SINGLE MAST ARM

SIGN BRACKET DETAILS

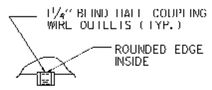


DETAIL A

| ANCHOR BOLT DETAIL | | |
|---|---|---|
| SIZE | L (IN) | T (IN) |
| 1- 1/4" X 48" | 42 | 8 |
| 1- 1/2" X 60" | 54 | 9 |
| 1- 3/4" X 90" | 84 | 9 |
| 2" X 96" | 96 | 9 |

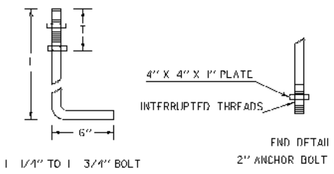


ANCHOR BOLT DETAIL

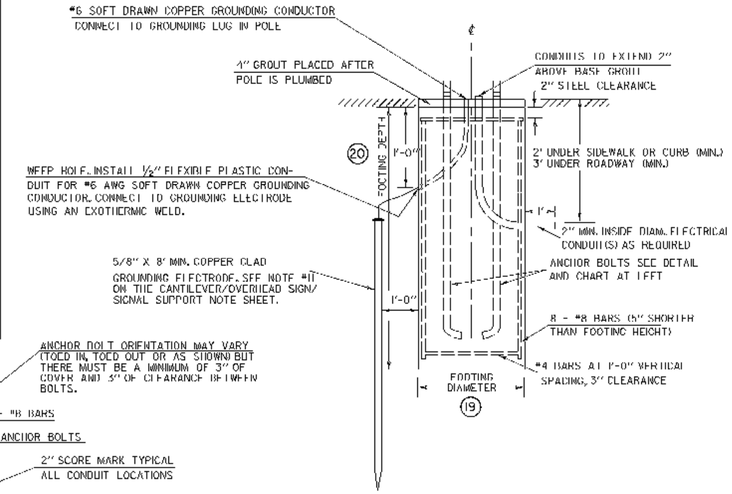


ELEVATION

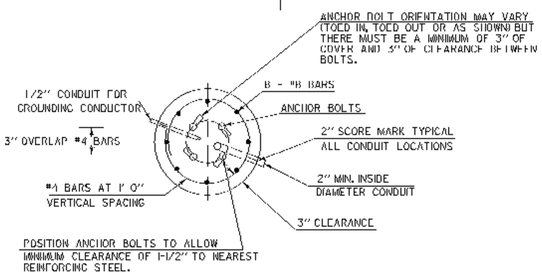


SECTION

CANTILEVER FOOTING DETAIL

(SPREAD FOOTINGS OR PILES ARE OPTIONAL)

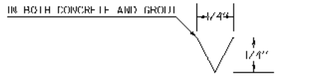


USED FOR CONDUIT LOCATION, SEE SECTION DETAIL AT LEFT

2" SCORE MARK DETAIL

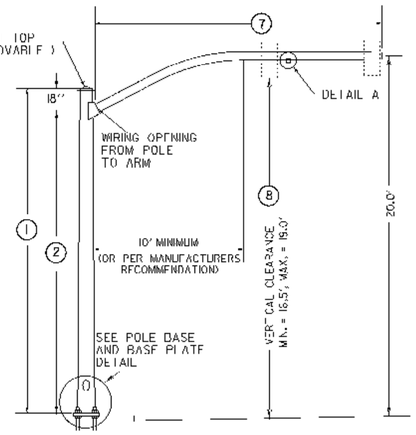


TYPE A1

(SPECIAL CURVED MAST ARM)

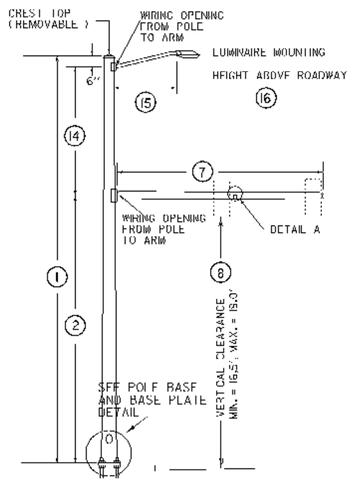


TYPE B

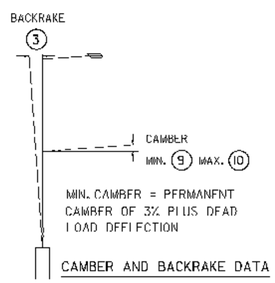


CAMBER AND BACKRAKE DATA

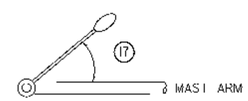


LUMINAIRE ORIENTATION

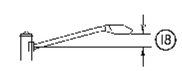


LUMINAIRE ARM RISE

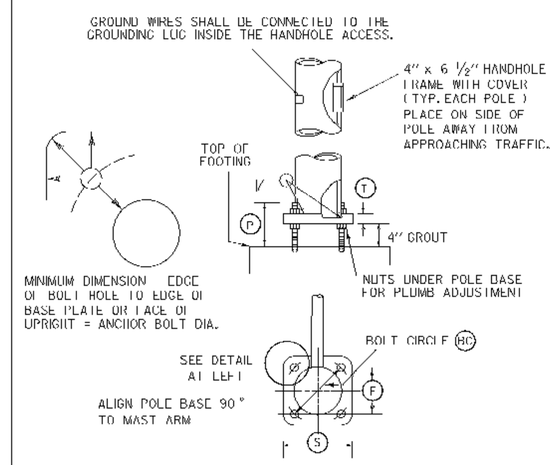


POLE BASE AND BASE PLATE DETAIL

| STRUCTURE DIMENSIONS | | | | | | | | | | | | | | | | | | | | | | | | | | | | |
|---|---|---|---|---|---|---|---|---|---|---|---|---|---|---|---|---|---|---|---|---|---|---|---|---|---|---|---|---|
| POLE DATA | | | | | | | | ARM DATA | | | | | | | LIGHTING DATA | | | | | FOOTING DATA | | BASE PLATE / BOLT DATA | | | | | | |
| POLE | TYPE | 1 | 2 | 3 | 4 | 5 | 6 | 7 | 8 | 9 | 10 | 11 | 12 | 13 | 14 | 15 | 16 | 17 | 18 | 19 | 20 | BC | F | S | T | P | ANCHOR BOLT SIZE |
| #1 | A1 | 17.5' | 16' | 0 | 12" | 7 | 0.14 IN/FT | 30' | 19' | 18° | | 8" | 7 | 0.14 IN/FT | | | | | | 3' | 3.5' | 16" | 11 5/16" | 16" | 1.25" | 4.5" | 1 x 36 |
| #2 | A1 | 17.5' | 16' | 0 | 12" | 7 | 0.14 IN/FT | 30' | 17.5' | 18° | | 8" | 7 | 0.14 IN/FT | | | | | | 3' | 3.5' | 16" | 11 5/16" | 16" | 1.25" | 4.5" | 1 x 36 |
| #3 | A1 | 17.5' | 16' | 0 | 10.5 | 7 | 0.14 IN/FT | 25' | 18' | 26° | | 7" | 7 | 0.14 IN/FT | | | | | | 3' | 3.5' | 14" | 9 7/8" | 14.5" | 1" | 4.25" | 1 x 36 |

NOTE:
DETAILS
NTS

# SINGLE MAST ARM CANTILEVER / FOOTING DETAIL SHEET

/traf/forms/cantilver.dgn
contsurm.l
PLOTTED: 5/1/2007

| | | | |
|---|---|---|---|
| PREPARED BY | JAR | DATE | 08/01/06 |
| CHECKED BY | CMB | DATE | 08/01/06 |
| DESIGN SUPERVISOR | | DATE | |
| PROJECT NAME: | HINESBURG | | |
| PROJECT NUMBER: | HES 021-1(21) | | |
| TRAFFIC SHEET NO. | 3 OF 4 | | |
| SHEET 15 OF 19 SHEETS | | | |