Metric

NOTE: UNLESS NOTED OTHERWISE, ALL STATIONS ARE IN KILOMETERS, ALL ELEVATIONS ARE IN METERS, AND ALL DIMENSIONS ARE IN MILLIMETERS.

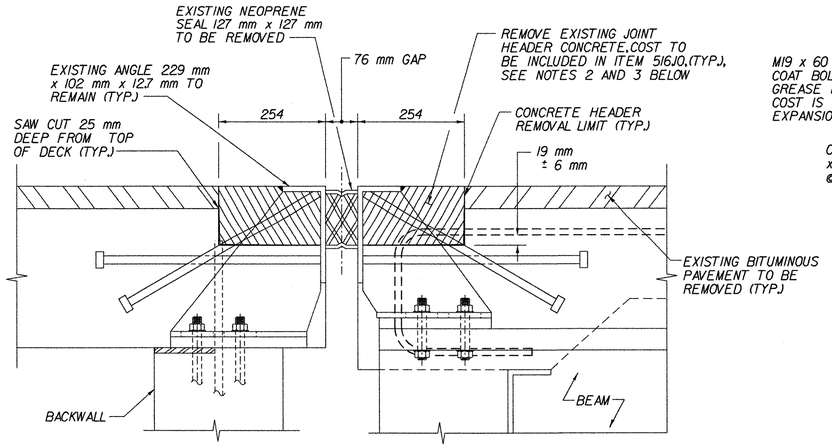

B / BRII04 EXISTING SECTION
N.T.S.

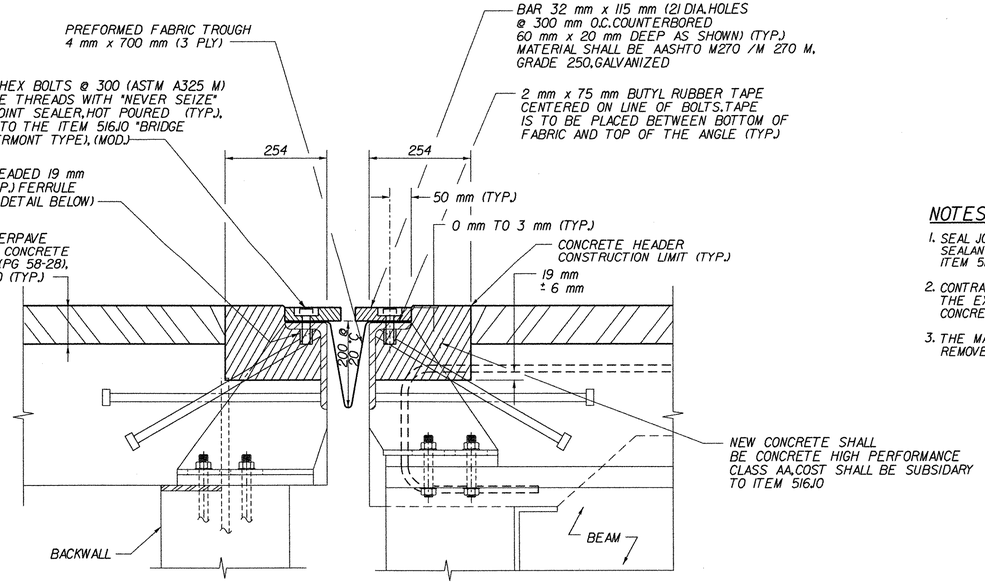

B / BRII04 PROPOSED SECTION
N.T.S.

NOTES:

1. SEAL JOINTS BETWEEN PLATES WITH SILICONE SEALANT.COST TO BE INCLUDED IN ITEM 516J0.(MOD.).
2. CONTRACTOR SHALL USE CARE NOT TO DAMAGE THE EXISTING JOINT COMPONENTS DURING CONCRETE HEADER REMOVAL OPERATIONS.
3. THE MAXIMUM SIZE AIR HAMMER USED TO REMOVE JOINT HEADER CONCRETE SHALL BE 7 kg.

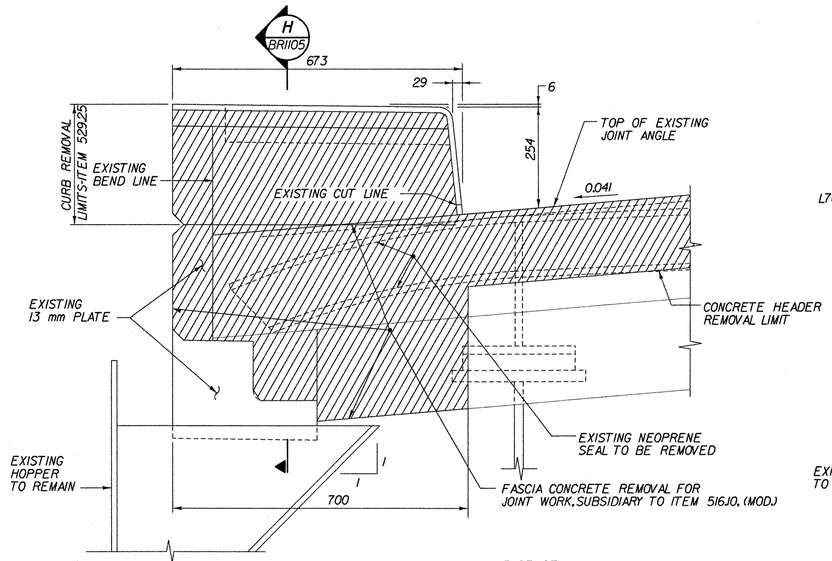

I / BRII04 EXISTING FASCIA DETAIL
N.T.S.

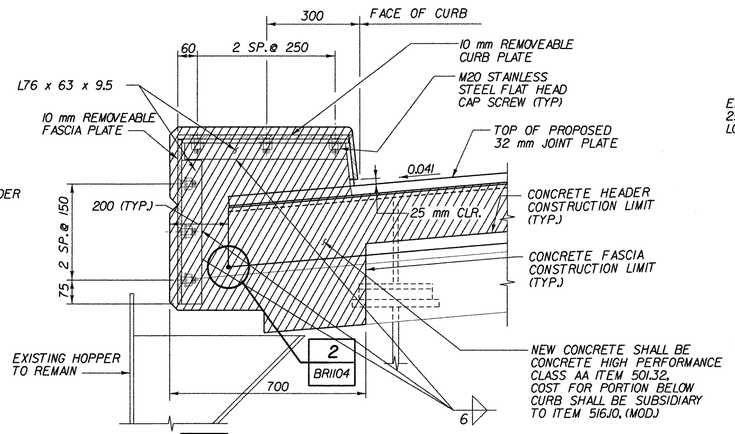

I / BRII04 PROPOSED FASCIA DETAIL
N.T.S.

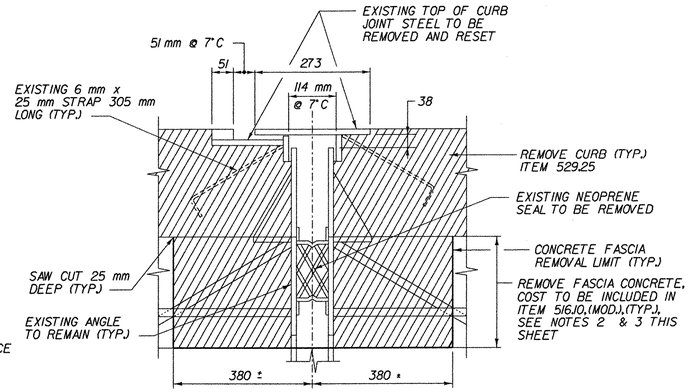

H / BRII05 EXISTING JOINT SECTION AT CURB
N.T.S.

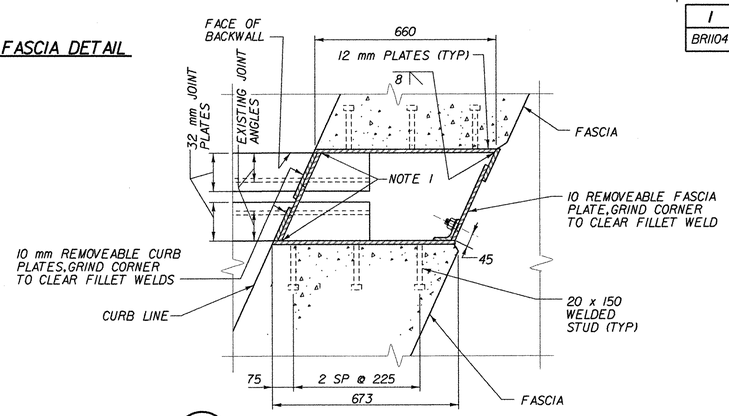

E / BRII04 PROPOSED PARTIAL JOINT PLAN
N.T.S.

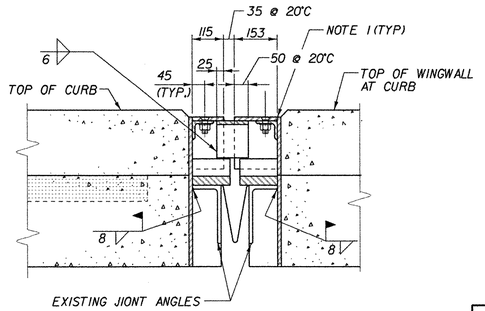

F / BRII04 PROPOSED JOINT SECTION AT CURB
N.T.S.

CHA CLOUGH, HARBOUR & ASSOCIATES LLP
ENGINEERS, SURVEYORS, PLANNERS & LANDSCAPE ARCHITECTS
11 WINNERS CIRCLE - ALBANY, NEW YORK - 12205 518-453-4500

STATE OF VERMONT
AGENCY OF TRANSPORTATION

Town Of	BENNINGTON	Bridge No. BRII00	
Highway No.	VT. RTE. 279	Log Sta.	
		Surv. Sta.	17+780
VT. RTE. 279 OVER VT. RAILWAY			
JOINT DETAILS			
Designed By	D. STECIAK	Drawn by K. RAPELLO/B. WEATHERBY	
Checked By M.W. OLSTAD	Date 02/04	Bridge Design Supervisor M.W. OLSTAD	Date 02/04
PROJECT BENNINGTON-HOOSICK		PROJECT NO. D.P.I. 0146(1) C/6	
I.G.C. Info.			
Bridge Sheet No. BRII05		Sheet 72 OF 83	

FILE NAME =u:\12502\MSTN\FINAL\RR\brg\jntsht2.plt
DATE/TIME =2/17/2004
USER =2225