Metric

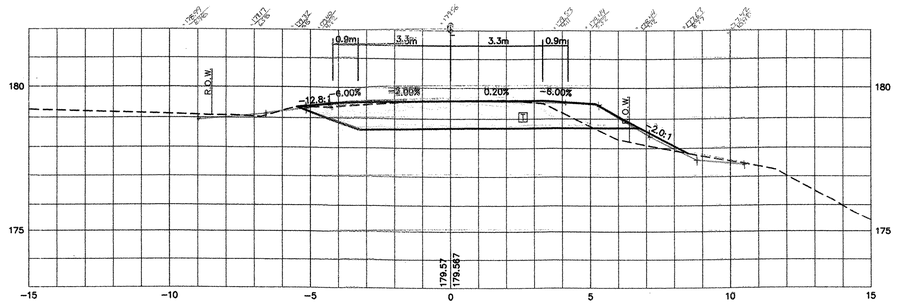

11+960

AREA: 7.56
7.59
7.58
22.75/3 = 7.58 sq m

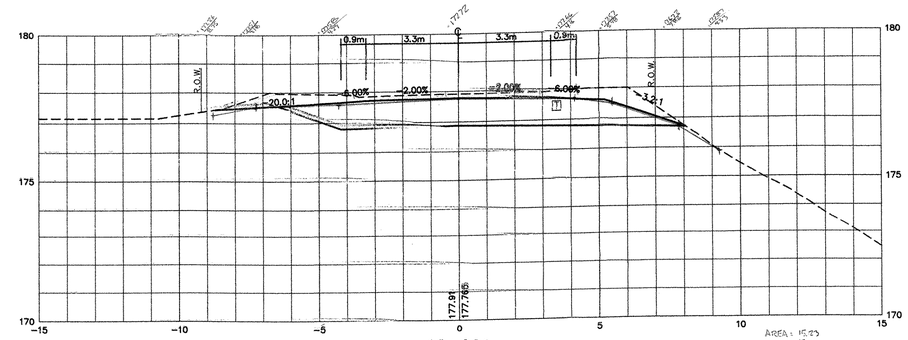

12+020

AREA: 15.23
15.19
15.25
45.67/3 = 15.22 sq m

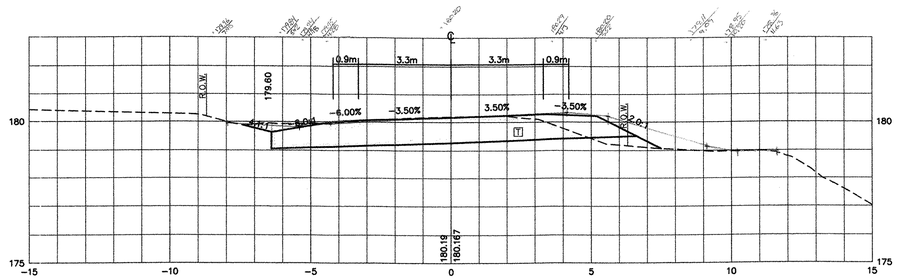

11+940

AREA: 8.79
8.81
8.75
26.35/3 = 8.78 sq m

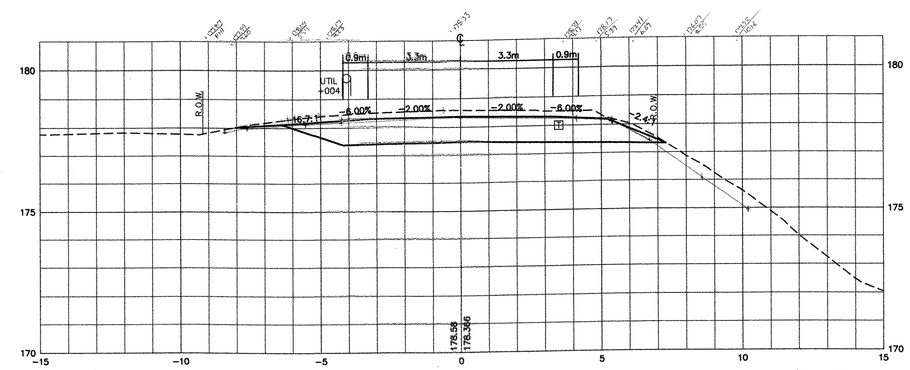

12+000

AREA: 12.89
13.01
12.69
38.59/3 = 12.93 sq m

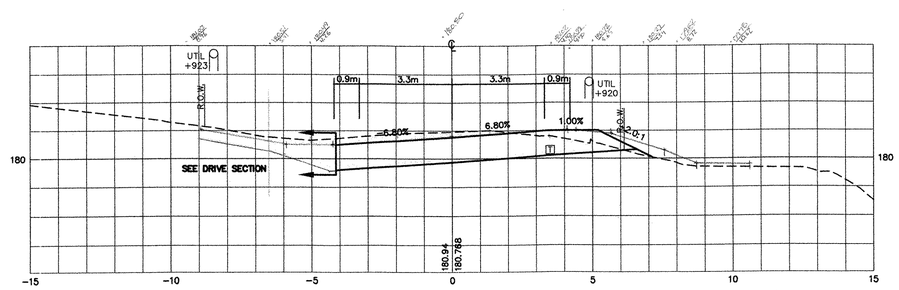

11+920

AREA: 10.75
10.70
10.76
32.21/3 = 10.74 sq m

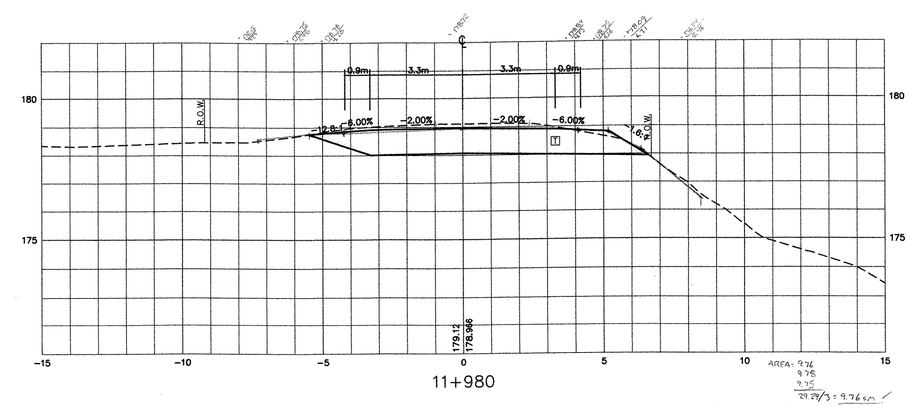

11+980

AREA: 9.76
9.78
9.75
29.29/3 = 9.76 sq m

Rev Dec 2/13/06

Paper Dec 6/10/06

2/15/06

ROUTE 121 CROSS SECTIONS

PROJECT: **GRAFTON–ROCKINGHAM, ROUTE 121**	PROJECT NO. : **STP 0126(4)S**
DESIGN FILE NAME: IPARM FILE NAME: SURVEYED BY: SQUAD LEADER:	PLOT DATE: 12/08/03 SURVEY DATE: DRAWN BY: SHEET: 80 OF 116

DATUM

VERTICAL NGVD 1929

HORIZONTAL NAD 1927

V: /1261/CADD/PLANS/SECTIONS–FINAL–ROUTE121–C2B.DWG

THE LOUIS BERGER GROUP, INC.