Metric

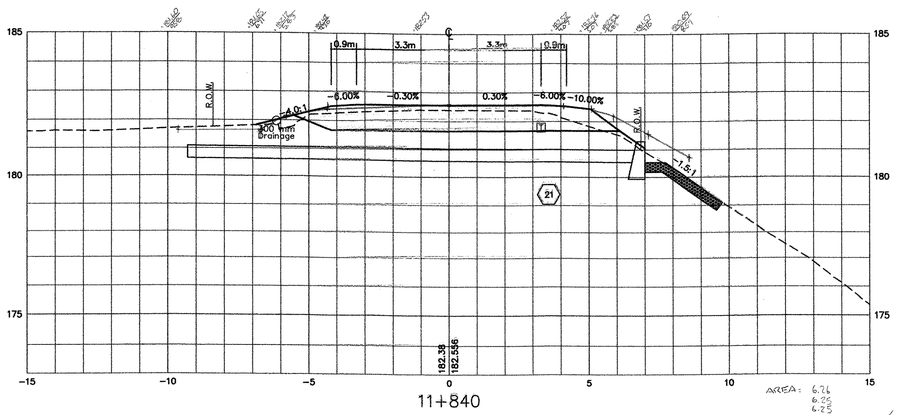

11+840

AREA: 6.26
6.26
6.25
18.76/3 = 6.25 sq m

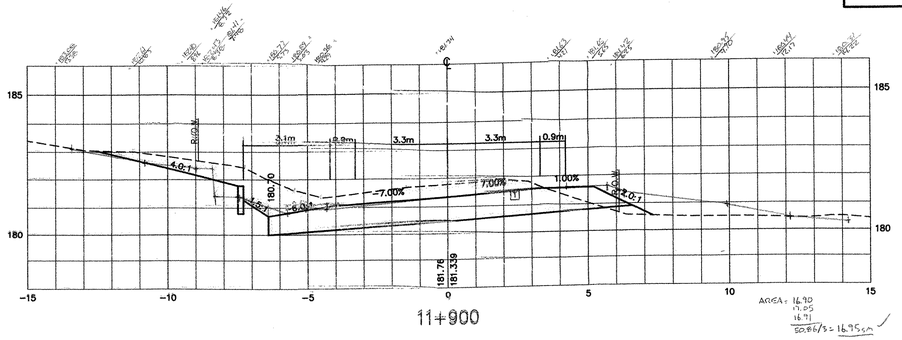

11+900

AREA: 16.90
17.05
16.71
50.86/3 = 16.95 sq m

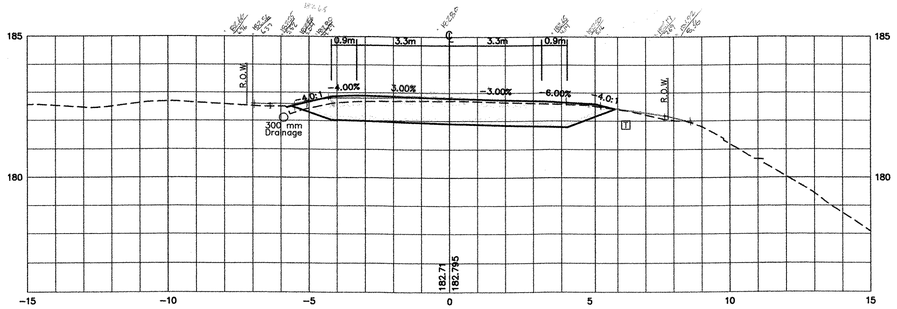

11+820

AREA: 7.26
7.21
7.28
21.75/3 = 7.25 sq m

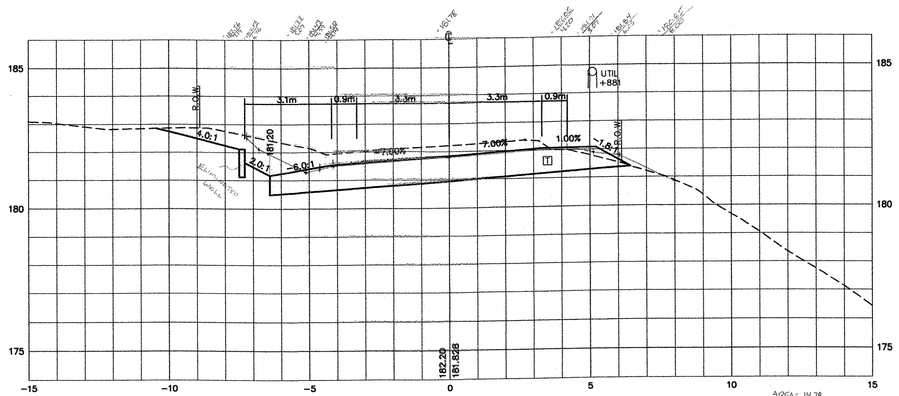

11+880

AREA: 14.78
14.72
14.75
44.25/3 = 14.75 sq m

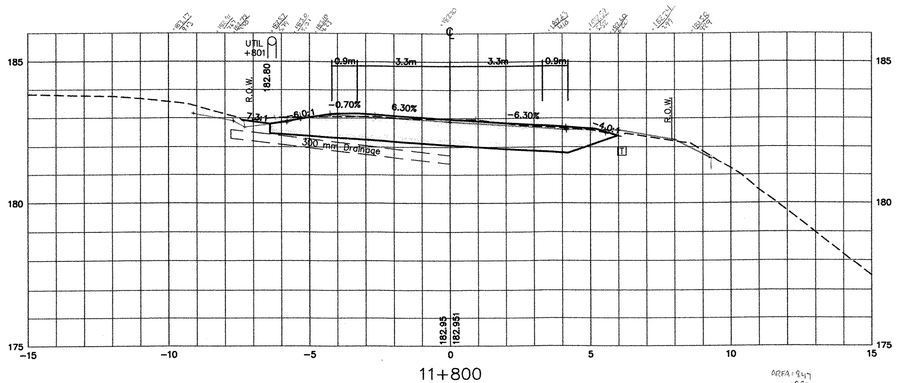

11+800

AREA: 9.47
9.51
9.55
28.53/3 = 9.51 sq m

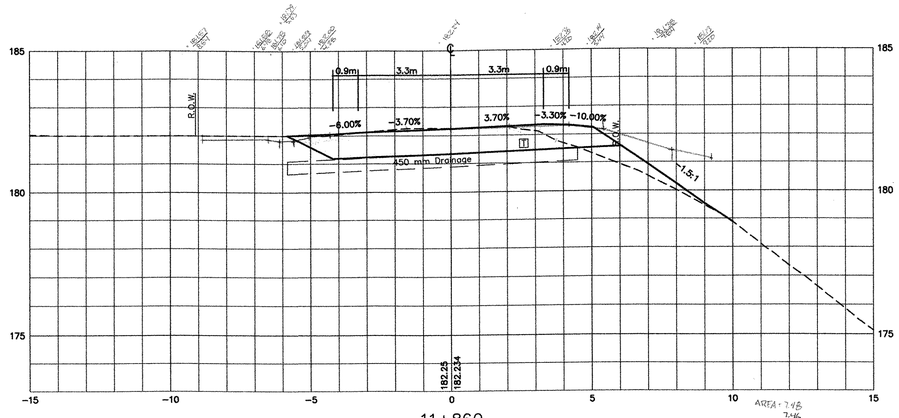

11+860

AREA: 7.48
7.46
7.43
22.37/3 = 7.46 sq m

ROUTE 121 CROSS SECTIONS

PROJECT: GRAFTON–ROCKINGHAM, ROUTE 121	PROJECT NO. : STP 0126(4)S
DESIGN FILE NAME:	
IPARM FILE NAME:	PLOT DATE: 12/08/03
SURVEYED BY:	SURVEY DATE:
SQUAD LEADER:	DRAWN BY:
	SHEET: 79 OF 116

DATUM

VERTICAL NGVD 1929

HORIZONTAL NAD 1927

V: /1261/CADD/PLANS/SECTIONS–FINAL–ROUTE121–C2B.DWG

THE LOUIS BERGER GROUP, INC.