Metric

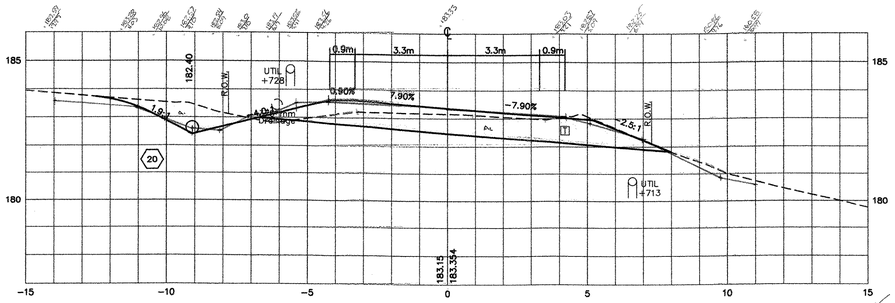

11+720

AREA: 10.03 sm

a: 2.33
2.31
2.29
6.93/3 = 2.31

a: 2.70
2.69
2.78
8.17/3 = 2.72

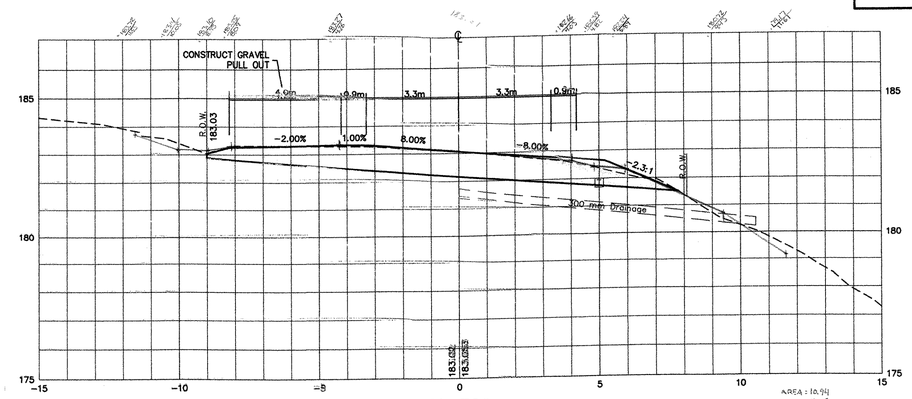

11+780

AREA: 10.94
11.05
11.07
33.06/3 = 11.02 sm

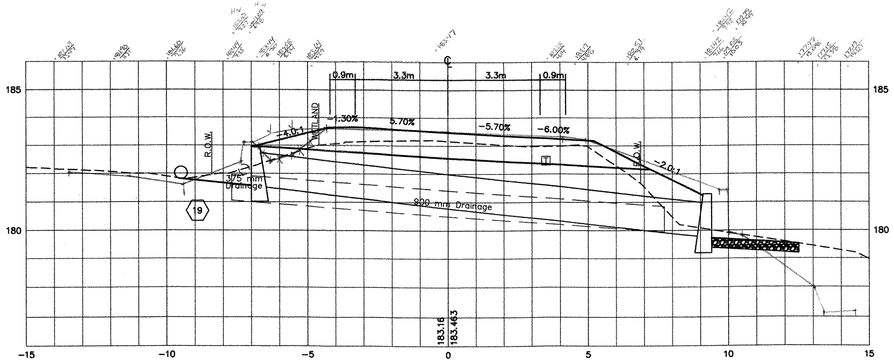

11+700

AREA: 5.60
5.63
5.55
16.78/3 = 5.59 sm

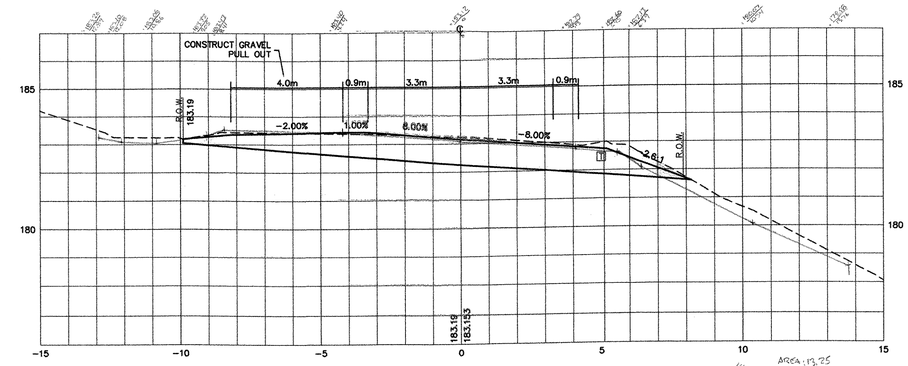

11+760

AREA: 13.25
13.26
13.16
39.67/3 = 13.22 sm

14.26
13.25
13.16
14.04 sm

2/01/06

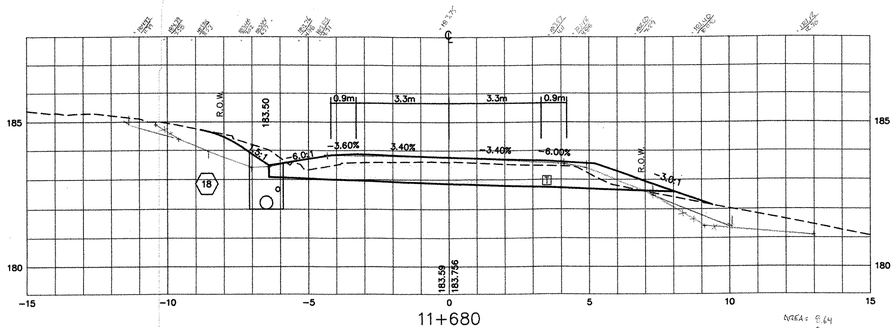

11+680

AREA: 8.64
8.69
8.68
26.01/3 = 8.67 sm

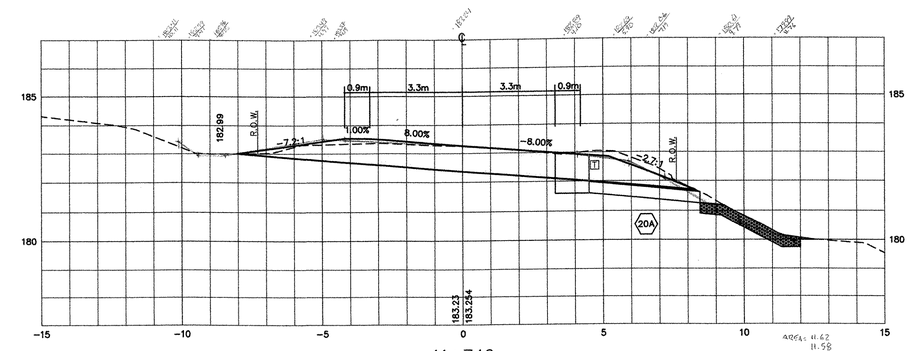

11+740

AREA: 11.62
11.58
11.62
34.83/3 = 11.61 sm

Proof
CRG
2/14/06

Fed
CRG
2/23/06

2/15/06

ROUTE 121 CROSS SECTIONS

PROJECT: GRAFTON–ROCKINGHAM, ROUTE 121	PROJECT NO. : STP 0126(4)S
DESIGN FILE NAME:	
IPARM FILE NAME:	PLOT DATE: 12/08/03
SURVEYED BY:	SURVEY DATE:
SQUAD LEADER:	DRAWN BY:
	SHEET: 78 OF 116

DATUM	
VERTICAL	NGVD 1929
HORIZONTAL	NAD 1927

V: /1261/CADD/PLANS/SECTIONS–FINAL–ROUTE121–C2B.DWG

THE LOUIS BERGER GROUP, INC.