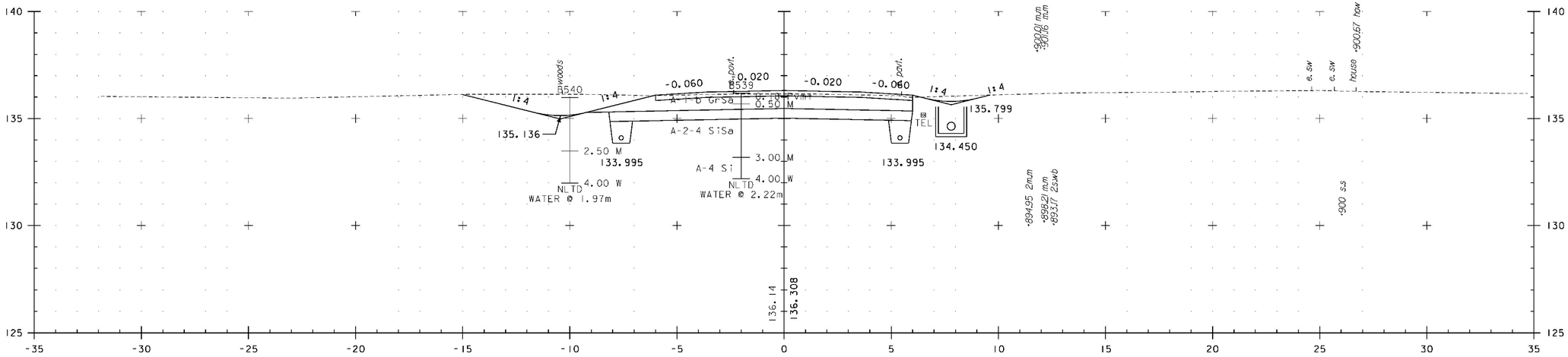

17+900.0

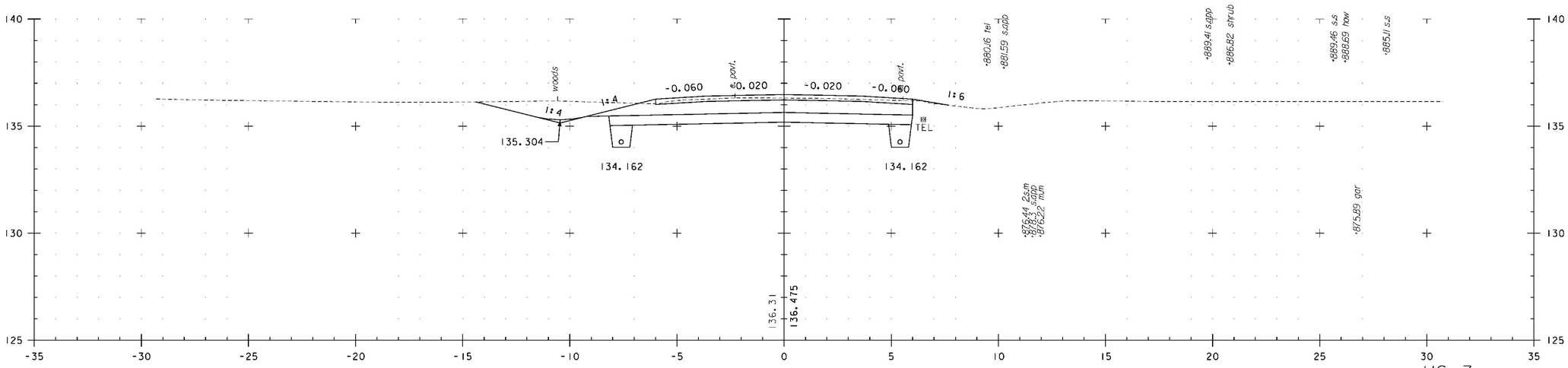

17+880.0

US 7

0 2 4 6 8 10
SCALE IN METERS

PROJECT NAME: BRANDON	
PROJECT NUMBER: NH 019-3(495)	
FILE NAME: zb008s5-xs051.dgn	PLOT DATE: 9/3/2009
PROJECT LEADER: CRB	DRAWN BY: NLL
DESIGNED BY: PTS	CHECKED BY: DAM
CLD 02-0149	SHEET 432 OF 546