TEMPORARY 4" WHITE LINE, PAINT
DURABLE ~~64" WHITE LINE, THERMOPLASTIC~~ RECESSED POLYUREA
178+00 TO 183+75 SOLID LT & RT

TEMPORARY 4" YELLOW LINE, PAINT
DURABLE ~~64" YELLOW LINE, THERMOPLASTIC~~ RECESSED POLYUREA
178+00 TO 183+75 SOLID LT & RT

REHAB. DROP INLETS, CATCH BASINS,
OR MANHOLES, CLASS I, II, OR III
181+24 LT (DI)
182+65 LT (CB)

CHANGING ELEVATION OF DROP INLETS,
CATCH BASINS, OR MANHOLES
(TO BE ADJUSTED BY OWNER)
181+06 LT (TMH)

BITUMINOUS CONCRETE GUTTERS
AND TRAFFIC ISLANDS
179+34 TO 180+25 RT
181+19 TO 181+65 LT

GRANITE SLOPE EDGING
~~181+64 TO 181+79 LT~~
~~182+07 TO 183+12 LT~~
~~183+51 TO 183+73 LT~~
185+25 TO 183+17 LT

CONSTRUCT CURBED ISLAND
AND PLACE 12" TOPSOIL,
SEED AND HAY MULCH.

~~STONE FILL, TYPE I~~
~~180+08 LT~~

~~STONE FILL, TYPE II~~
~~180+25 TO 183+75 RT~~

REMOVING SIGNS
AS SHOWN - 1

BITUMINOUS CONCRETE GUTTER
AND TRAFFIC ISLAND
180+25 TO 183+75 RT

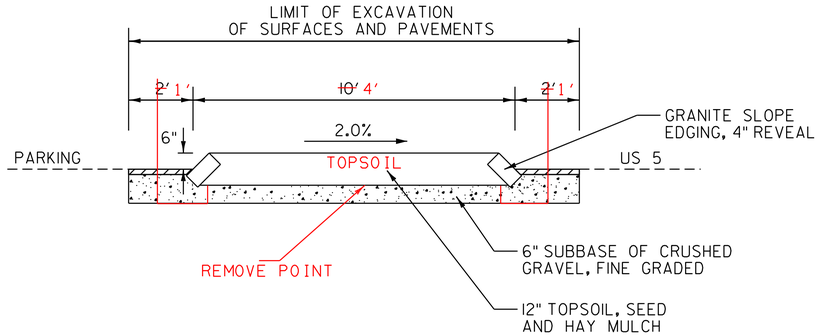


**CURBED ISLAND DETAIL**

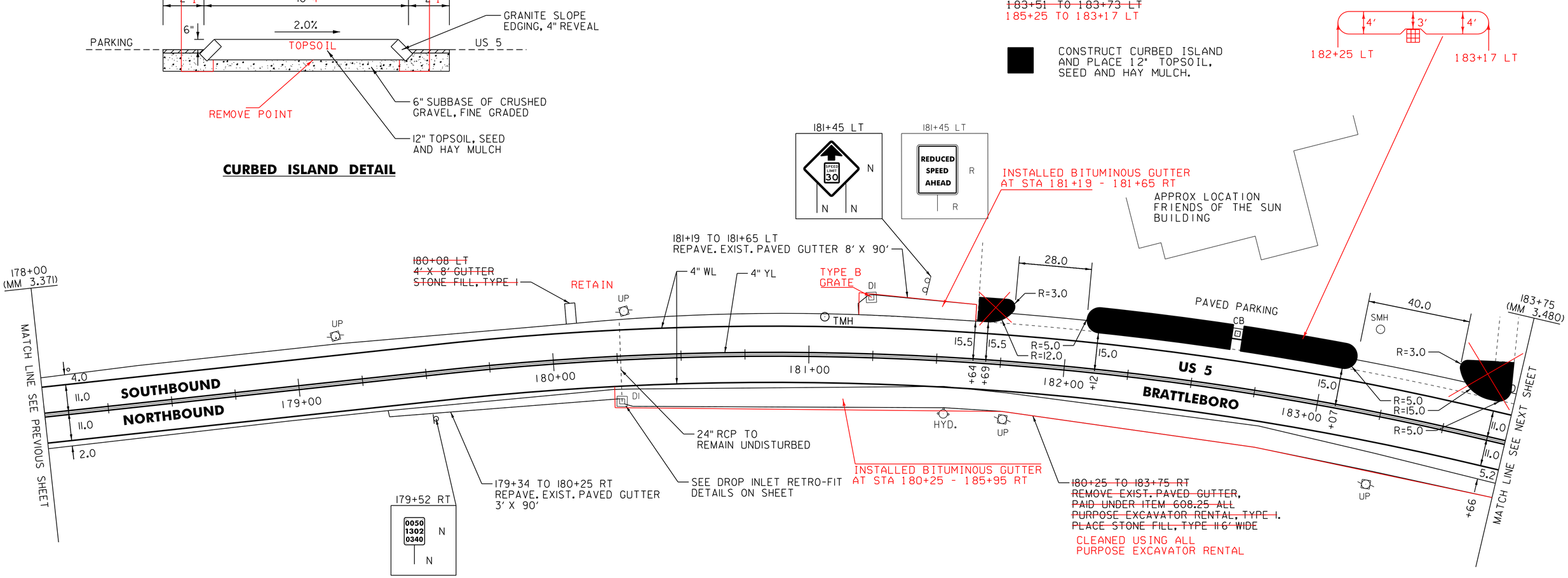


LEGEND

| | | |
|---|---|---|
| R | = | REMOVE EXISTING |
| S | = | SALVAGE |
| R&S | = | REMOVE AND SALVAGE |
| N | = | NEW |
| RET | = | RETAIN |
| B-B | = | BACK TO BACK |
| | = | EXISTING GUARDRAIL |
| | = | PROPOSED GUARDRAIL |
| YL | = | YELLOW LINE |
| WL | = | WHITE LINE |
| | = | DELINEATOR |

NOT TO SCALE

# ROADWAY LAYOUT 5 US 5

PROJECT NAME: BRATTLEBORO-PUTNEY

PROJECT NUMBER: STP 2310(1)

FILE NAME: /pave/01c032/pc032
PROJECT LEADER: PTS
DESIGNED BY: NLL
IPARM FILE NAME: 01C032_26

PLOT DATE: 02-MAY-2012 17:2
DRAWN BY: WWG
CHECKED BY: NLL/PTS
SHEET 26 OF 118