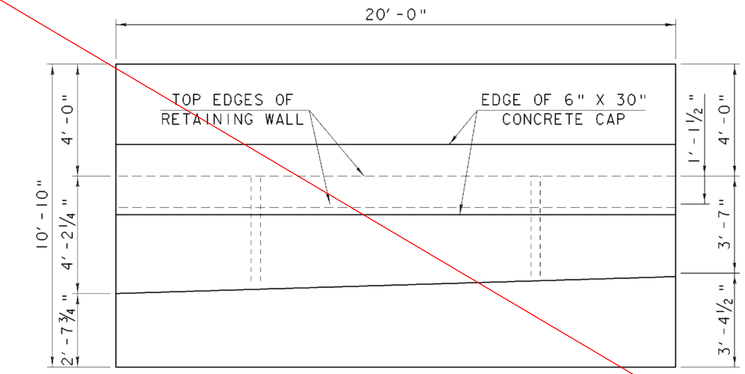

PLAN

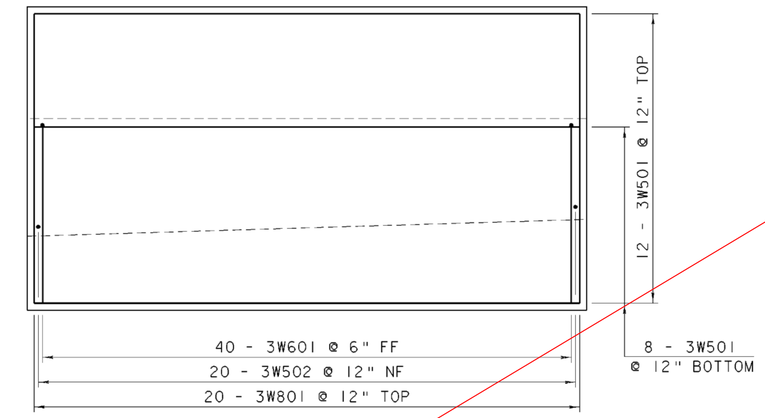

FOOTING REINFORCING

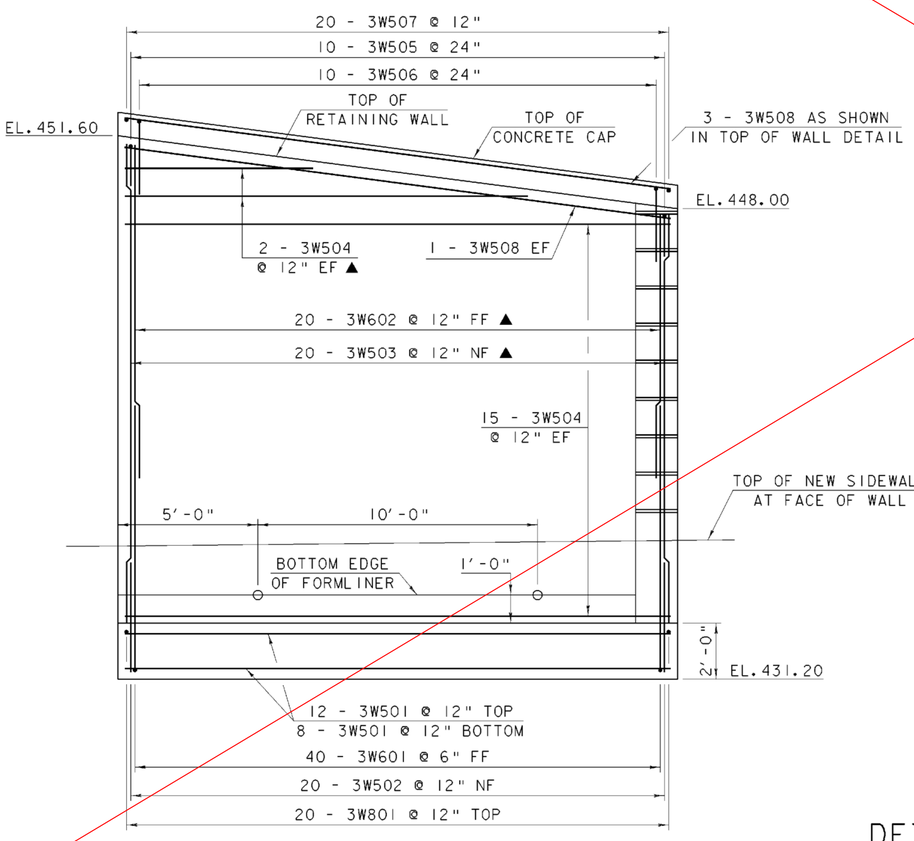

ELEVATION

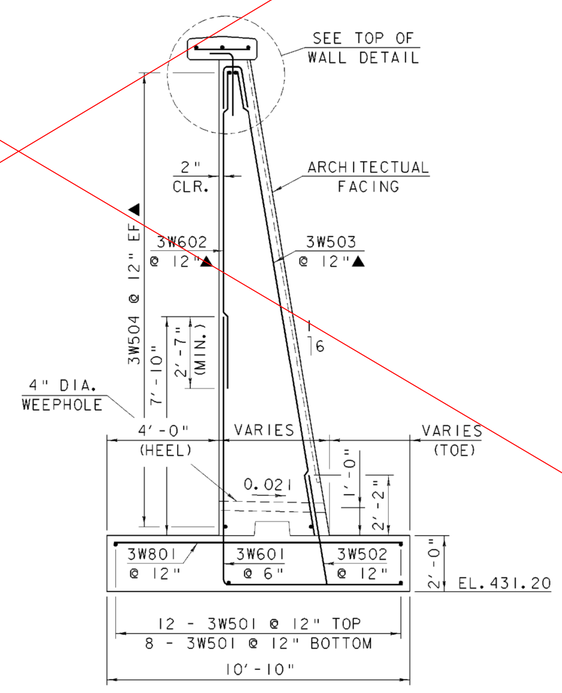

TYPICAL SECTION

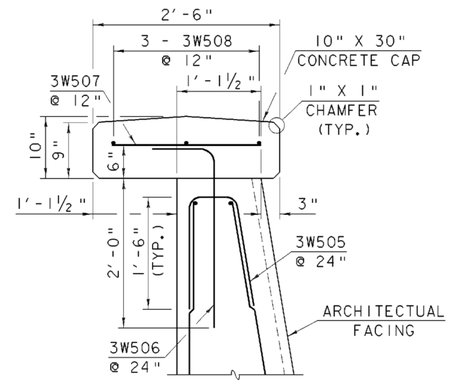

TOP OF WALL DETAIL

SCALE: 1" = 1'-0"

NOTE:

NF = NEAR FACE
FF = FAR FACE
EF = EACH FACE
▲ = CUT TO FIT IN FIELD
3" CLR. UNLESS OTHERWISE NOTED
2'-2" BAR LAP UNLESS OTHERWISE NOTED

DETAILS FOR RETAINING WALL NO. 3
STA. 16+75.0 LT. - STA. 16+94.3 LT.

SCALE: ⅜" = 1'-0"

RETAINING WALL NO. 3 DETAILS

PROJECT NAME: SPRINGFIELD
PROJECT NUMBER: STP 016-2 (10)S

FILE NAME: 00b124\structures\sb124rwd.i
PROJECT MANAGER: R. WHITCOMB
DESIGNED BY: G. ROY
PLOT DATE: 17-AUG-2004
DRAWN BY: G. ROY
CHECKED BY: R. WHITCOMB
SHEET 49 OF 72