STATE OF VERMONT
AGENCY OF TRANSPORTATION

TOWN OF CORINTH
COUNTY OF ORANGE

ROUTE NO :TH 50, CL 3 BRIDGE NO : BR 34

PROJECT LOCATION : THE PROJECT BEGINS ON TH #50 0.4 km SOUTH OF THE INTERSECTION OF TH #50 AND TH #2 AND EXTENDS 60 m EASTERLY ALONG TH #50.

PROJECT DESCRIPTION : THE PROJECT SHALL CONSIST OF THE REPLACEMENT OF THE EXISTING STRUCTURE WITH A NEW STRUCTURE INCLUDING RELATED ROADWAY AND CHANNEL WORK

LENGTH OF STRUCTURE :	22.328	METERS.
LENGTH OF ROADWAY :	37.672	METERS.
LENGTH OF PROJECT :	60.000	METERS.

INDEX OF SHEETS

1. TITLE SHEET
2. PRELIMINARY INFORMATION
3. QUANTITY SHEET 1
4. QUANTITY SHEET 2
5. QUANTITY SHEET 3
6. TIE SHEET
7. LAYOUT SHEET 1
8. LAYOUT SHEET 2
9. PROFILE SHEET
10.-12. TRAFFIC DETOUR SHEETS
13. TRAFFIC SIGN SUMMARY SHEET
14.-16. BORING SHEETS
17. PLAN AND ELEVATION
18. MISCELLANEOUS DETAILS
19. GENERAL NOTES
20. DECK STRUCTURAL DETAILS
21. FRAMING PLAN
22. STRUCTURAL STEEL DETAILS
23. BEARING DETAIL SHEET
24. ABUTMENT #1 PLAN AND ELEVATION
25. ABUTMENT #2 PLAN AND ELEVATION
26. WINGWALL DETAIL SHEET
27. REINFORCING STEEL SCHEDULE
28. EPSC NARRATIVE
29. EPSC EXISTING CONDITIONS SITE PLAN
30. EPSC CONSTRUCTION SITE PLAN
31. EPSC FINAL CONDITIONS SITE PLAN
32.-33. EPSC DETAILS
34. ROW LAYOUT
35. ROW DETAILS
36.-39. MAIN LINE SECTIONS
40.-42. CHANNEL LINE SECTIONS

LIST OF STANDARDS

B-71	07/08/2005
E-100	01/02/2004
E-100A	01/02/2004
E-102A	05/01/2004
E-107A	08/08/1995
E-141	09/20/1995
G-1	01/03/2000
G-1D	01/03/2000
SB-R6-82M	07/10/1997

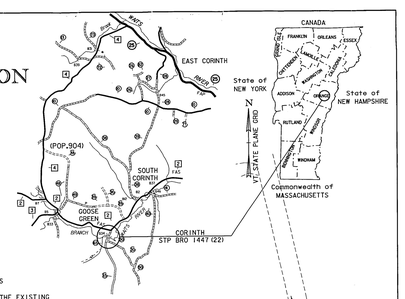

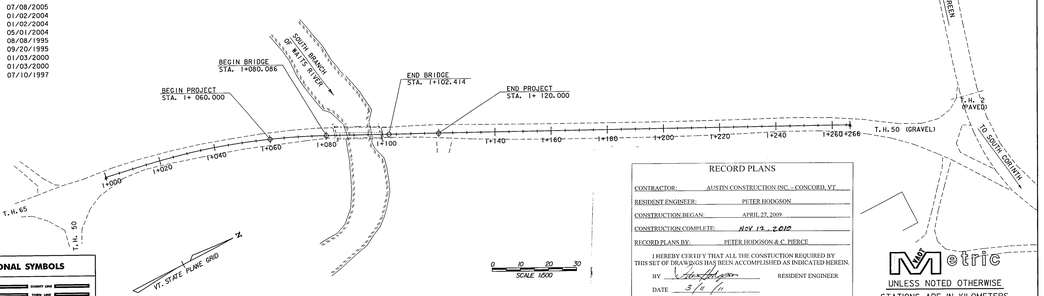

CONVENTIONAL SYMBOLS

COUNTY LINE
TOWN LINE
LMITS OF ACCESS
PONT OF ACCESS
FENCE LINE
STONE WALL
TRAVELED WAY
GUARD RAIL
RAILROAD
SURVEY LINE
CULVERT
POWER POLE
TELEPHONE POLE
TREES
CONTROL OF ACCESS
PROPERTY LINE
R.O.W. TAKING LINE
SLOPE RIGHTS
TOP OF CUT
TOE OF SLOPE

SURVEYED BY : R. GILMAN
SURVEYED DATE : 3/15/95

DATUM
VERTICAL NAVD 88
HORIZONTAL NAD 83/92

RECORD PLANS

CONTRACTOR: AUSTIN CONSTRUCTION INC. - CONCORD, VT
RESIDENT ENGINEER: PETER HODGSON
CONSTRUCTION BEGAN: APRIL 27, 2009
CONSTRUCTION COMPLETE: NOV 19, 2010
RECORD PLANS BY: PETER HODGSON & C. PIERCE

I HEREBY CERTIFY THAT ALL THE CONSTUCTION REQUIRED BY THIS SET OF DRAWINGS HAS BEEN ACCOMPLISHED AS INDICATED HEREIN.
BY RESIDENT ENGINEER
DATE 3/11/11

NOTE: Any further information concerning final quantities, amounts or other details relative to this project may be found at Central Files in the electronic archives.

THESE PLANS ARE SUBJECT TO SUCH ENGINEERING CHANGES AS MAY BE REQUIRED BY THE FEDERAL HIGHWAY ADMINISTRATION OR THE DIRECTOR OF PROGRAM DEVELOPMENT.

CONSTRUCTION IS TO BE CARRIED ON IN ACCORDANCE WITH THESE PLANS AND THE STANDARD SPECIFICATIONS FOR CONSTRUCTION DATED 2006, AS APPROVED BY THE FEDERAL HIGHWAY ADMINISTRATION ON JUNE 15, 2006 FOR USE ON THIS PROJECT, INCLUDING ALL SUBSEQUENT REVISIONS AND SUCH REVISED SPECIFICATIONS AND SPECIAL PROVISIONS AS ARE INCORPORATED IN THESE PLANS.

PLOTTED 15-JUL-2008

Metric
UNLESS NOTED OTHERWISE
STATIONS ARE IN KILOMETERS
ELEVATIONS ARE IN METERS
DIMENSIONS ARE IN MILLIMETERS

DIRECTOR OF PROGRAM DEVELOPMENT
APPROVED DATE 7-15-08

PROJECT MANAGER : G.P. WILLIAMS

PROJECT NAME : CORINTH
PROJECT NUMBER :
STP BRO 1447(22) (RE-ADVERTISED)
SHEET 1 OF 42 SHEETS

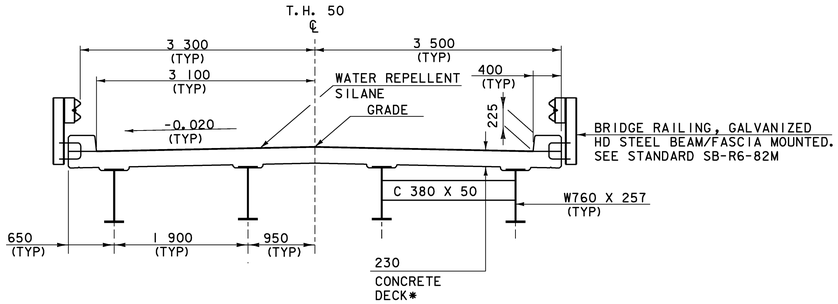

*SPECIAL PROVISION (HIGH PERFORMANCE CONCRETE, CLASS A LOW CEMENT)

TYPICAL BRIDGE SECTION

0 1 2 3 4

SCALE = 1:40

MATERIAL ITEM	TOLERANCE
AGGREGATE SURFACE COURSE	±10 mm
SUBBASE	±30 mm
SAND BORROW	±30 mm

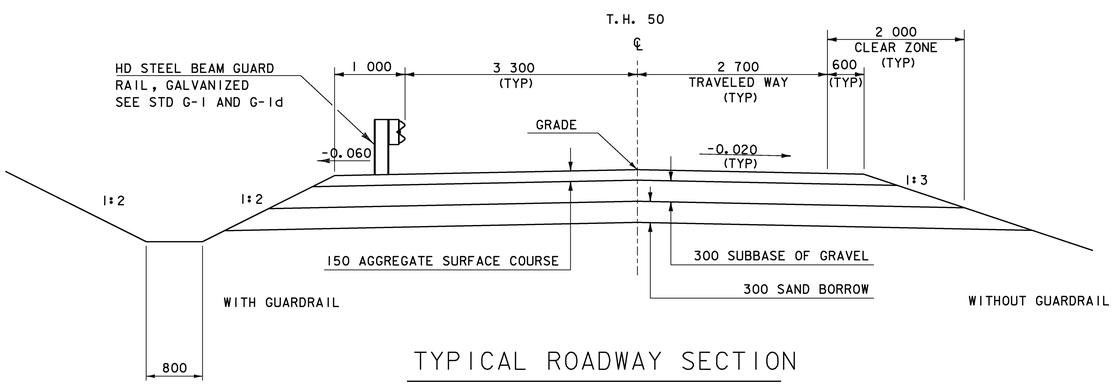

TYPICAL ROADWAY SECTION

0 1 2 3 4

SCALE = 1:40

FINAL HYDRAULICS REPORT

Metric

HYDROLOGIC DATA

DRAINAGE AREA= 93.8 sq. km
CHARACTER OF TERRAIN: Hilly to mountainous
CHARACTER & TYPE OF STREAM: Straight, probably incised and alluvial. Not braided or anabranched.
NATURE OF STREAMBED: mostly gravel with some sand and cobbles.

Q2.33= 32.6 cms Q50= 113.3 cms
Q10= 70.8 cms Q100= 130.3 cms
Q25= 94.3 cms Q500= 221.4 cms

DATE OF FLOOD OF RECORD: November 1927
WATER SURFACE ELEV.: Unknown ESTIMATED DISCHARGE: Unknown
NATURAL STREAM VELOCITY @ Q 25 = 3.0 mps
ICE CONDITIONS: Moderate DEBRIS: Moderate
DOES THE STREAM REACH MAXIMUM HIGHWATER ELEVATION RAPIDLY? Yes
IS ORDINARY RISE RAPID? Yes
IS STAGE AFFECTED BY UPSTREAM OR DOWNSTREAM CONDITIONS? No
IF YES, DESCRIBE.

WATERSHED STORAGE 2% HEADWATERS ___ UNIFORM THROUGHOUT WATERSHED X
IMMEDIATELY ABOVE SITE ___

EXISTING STRUCTURE

STRUCTURE TYPE: Single span steel truss bridge YEAR BUILT: 1954
CLEAR SPAN (NORMAL TO STREAM): 15.0 m
VERTICAL CLEARANCE ABOVE STREAMBED: 2.7 m
WATERWAY OF FULL OPENING: 31.8 sq. m
DISPOSITION OF STRUCTURE: Remove

TYPE OF MATERIAL UNDER SUBSTRUCTURE: Unknown

WATER SURFACE ELEV. @ Q2.33= 234.5 VELOCITY= 3.1 mps
Q10= 235.3 " 3.9 mps
Q25= 236.0 " 4.1 mps
Q50= 236.1 " 4.2 mps
Q100= 236.1 " 4.4 mps

LONG TERM STREAM BED CHANGES: There is a 0.3m to 1.2m deep scour hole through and downstream of the bridge.
IS THE ROADWAY OVERTOPPED BELOW THE Q100? Yes FREQUENCY: Q15
RELIEF ELEVATION: 235.6 DISCHARGE OVER ROAD @ Q100: 43.9 cms

UPSTREAM STRUCTURE: TOWN: Corinth DISTANCE: 1.6 km
HIGHWAY NO.: T.H. 60 STRUCTURE NO.: 33
STRUCTURE TYPE: CGMPPA
CLEAR SPAN: 6.7 m CLEAR HEIGHT: 3.0 m
YEAR BUILT: - FULL WATERWAY: -

DOWNSTREAM STRUCTURE: TOWN: Corinth DISTANCE: 1.6 km
HIGHWAY NO.: T.H. 40 STRUCTURE NO.: 37
STRUCTURE TYPE: Single span steel beam bridge with wood deck
CLEAR SPAN: 10.7 m CLEAR HEIGHT: 4.3 m
YEAR BUILT: - FULL WATERWAY: -

PROPOSED STRUCTURE

STRUCTURE TYPE: Steel beam single span bridge

CLEAR SPAN (NORMAL TO STREAM): 20.0 m
VERTICAL CLEARANCE ABOVE STREAMBED: 2.6 m
WATERWAY OF FULL OPENING: 43.0 sq. m

WATER SURFACE ELEV. @ Q2.33= 234.1 VELOCITY= 2.1 mps
Q10= 234.8 " = 2.8 mps
Q25= 235.1 " = 3.1 mps
Q50= 235.2 " = 3.4 mps
Q100= 235.3 " = 3.7 mps

IS THE ROADWAY OVERTOPPED BELOW THE Q100? No FREQUENCY: -
RELIEF ELEVATION: 235.6 DISCHARGE OVER ROAD @ Q100: None

AVERAGE LOW ELEVATION OF SUPERSTRUCTURE: 235.5
VERTICAL CLEARANCE @ Q25 = 0.4 m

SCOUR: 0.8 m of contraction scour at Q100 and Q500
REQUIRED CHANNEL PROTECTION: Stone Fill, Type II

PERMIT INFORMATION

AVERAGE DAILY FLOW: 2.1 cms
ORDINARY LOW WATER: 1.0 cms ELEV.: 233.0
ORDINARY HIGH WATER: 14.0 cms ELEV.: 233.8

DESIGN CRITERIA:
1. DESIGN LIVE LOAD AASHTO HL-93
2. DESIGN SPAN 21.5 m
3. ALLOWABLE LOAD FOR SPREAD FOOTINGS ON SOIL N/A ON LEDGE N/A
4. ALLOWABLE LOAD FOR PILING SEE GENERAL NOTES TYPE HP 310x93 ESTIMATED LENGTH 20.0 m
5. STRUCTURAL STEEL AASHTO GRADE 345W, M 270M/M 270
6. REINFORCING STEEL GRADE 420
7. CONCRETE CLASS A f'_c : 30 MPa SPECIAL PROVISION (HIGH PERFORMANCE CONCRETE, CLASS A LOW CEMENT).
CONCRETE CLASS B f'_c : 25 MPa CONCRETE, HIGH PERFORMANCE CLASS B.
SILICA-FUME CONCRETE f'_c : 35 MPa N/A

TRAFFIC MAINTENANCE:
1. IS TRAFFIC TO BE MAINTAINED? NO IF YES, ON EXISTING STRUCTURE NA OR ON TEMPORARY BRIDGE NA
2. TEMPORARY BRIDGE REQUIREMENTS: ONE OR TWO WAY ------ TRAFFIC CONTROL SIGNALS REQUIRED ------
MINIMUM CLEAR SPAN (NORMAL TO STREAM): ------ VERTICAL CLEARANCE ABOVE STREAMBED: ------
WATERWAY OF FULL OPENING: ------
ARE SIDEWALKS REQUIRED? ------ IF SO, ON WHAT SIDE? ------
STRUCTURE TYPE: Road will be closed during construction.

LOAD FACTOR LOAD RATING (TONNES)

LOADING LEVELS (LOAD FACTOR)	TRUCK						
	M	MS	3S2	6 AXLE	3A.STR.	4A.STR.	5A.SEMI
INVENTORY A = 2.17 B = 1.00	51	64					
POSTED A = 1.55 B = 1.40	71	89	113		83	85	102
OPERATING A = 1.30 B = 1.67		107	135	164	99	102	

STRENGTH $RF = \frac{\phi M_N - 1.3 M_{DL}}{A \times M_{LL+I}}$

SERVICEABILITY $RF = B\left[\frac{.95 F_Y S_{LL+I} - M_{DL}\frac{S_{LL+I}}{S_{DL}} - M_{SDL}\frac{S_{LL+I}}{S_{SDL}}}{1.67 M_{LL+I}}\right]$

TRAFFIC DATA

YEAR	ADT	DHV	% D	% T	ADTT
1996	100	15	--	2	2
2016	130	20	--	2	2

20 year ESAL for flexible pavement from ---- to ----: N.A.
40 year ESAL for flexible pavement from ---- to ----: N.A.
Design speed: 50 km/h

STATE OF VERMONT
AGENCY OF TRANSPORTATION

Town Of CORINTH	Bridge No. 34
Highway No. T.H.50	Log Sta. 3971.405
	Surv. Sta.

PRELIMINARY INFORMATION

T.H.50 OVER SO.BRANCH OF WAITS RIVER

Designed By T.A.SUMNER	Drawn By T.A.SUMNER
Checked By W.B.SYMONDS Date 10/97	Bridge Design Supervisor C.P.WILLIAMS Date 10/97
PROJECT CORINTH	PROJECT NO. STP BRO 1447(22) RE-ADVERTISED
I.G.C. Info. M:\Projects\93J042\Structures\sJ042pl.dgn	sJ042pl21
Bridge Sheet No.	Sheet 2 of 42

STATE OF VERMONT
AGENCY OF TRANSPORTATION

QUANTITY SHEET 1

Metric

SUMMARY OF ESTIMATED QUANTITIES						TOTALS		DESCRIPTIONS			
ROADWAY	EROSION CONTROL	BRIDGE	100% STP FUNDS	FULL C.E ITEM		GRAND TOTAL	FINAL	UNIT	ITEMS	ITEM NUMBER	ROUND
1						1	1	LS	CLEARING AND GRUBBING, INCLUDING INDIVIDUAL TREES AND STUMPS	201.10	
536						536	423	CM	COMMON EXCAVATION	203.15	
		300				300	257.2	CM	UNCLASSIFIED CHANNEL EXCAVATION	203.27	
90						90	118.93	CM	SAND BORROW	203.31	
	10					10	0	CM	TRENCH EXCAVATION OF EARTH	204.20	
1						1	0	CM	TRENCH EXCAVATION OF EARTH, EXPLORATORY (N.A.B.I.)	204.22	
		115				115	115	CM	STRUCTURE EXCAVATION	204.25	
		80				80	80	CM	GRANULAR BACKFILL FOR STRUCTURES	204.30	
331	~~20~~ 0					351	336	CM	SUBBASE OF GRAVEL	301.15	
90						90	110	CM	AGGREGATE SURFACE COURSE	401.10	
		28				28	23.168	CM	CONCRETE, HIGH PERFORMANCE CLASS B	501.34	
		1				1	1	LS	FURNISHING EQUIPMENT FOR DRIVING PILING	504.10	
		160				160	164.064	M	STEEL PILING FOR INTEGRAL ABUTMENTS, HP 310 X 93	505.255	
		2				2	2	EACH	DYNAMIC PILE LOADING TEST	505.45	
		23305				23305	22687	KG	STRUCTURAL STEEL, ROLLED BEAM	506.50	
		8997				8997	9472	KG	EPOXY COATED REINFORCING STEEL	507.17	
		1				1	1	LS	SHEAR CONNECTORS (440 - 22 X 178)	508.15	
		75				75	103.85	L	WATER REPELLENT, SILANE	514.10	
		46				46	45.72	M	BRIDGE RAILING, GALVANIZED HD STEEL BEAM/FASCIA MOUNTED	525.41	
		1				1	1	EACH	REMOVAL OF STRUCTURE (77 SM - EST.)	529.15	
		8				8	8	EACH	BEARING DEVICE ASSEMBLY, INTEGRAL ABUTMENT	531.14	
	10					10	4	HR	ALL PURPOSE EXCAVATOR RENTAL, TYPE I	608.25	
	1					1	0	T	DUST AND ICE CONTROL WITH CALCIUM CHLORIDE	609.15	
	10					10	0	CM	STONE FILL, TYPE I	613.10	
		120				120	122.5	CM	STONE FILL, TYPE II	613.11	
42						42	0	M	REMOVING AND RESETTING FENCE	620.50	
0						0	42	M	REMOVAL OF EXISTING FENCE (C.O. NO. 1 DATED 10-03-09)	620.55	
78						78	80.164	M	HD STEEL BEAM GUARDRAIL, GALVANIZED	621.21	
4						4	4	EACH	ANCHOR FOR STEEL BEAM RAIL	621.60	
9						9	8.8	M	REMOVAL AND DISPOSAL OF GUARDRAIL	621.80	
				1		1	1	LS	FIELD OFFICE-ENGINEERS	631.10	
				1		1	1	LS	TESTING EQUIPMENT - CONCRETE	631.16	
				1		1	0.208	LU	FIELD OFFICE - TELEPHONE (NABI)	631.25	
1						1	1	LS	MOBILIZATION / DEMOBILIZATION	635.11	
1						1	1	LS	TRAFFIC CONTROL	641.10	
	150					150	161.8	SM	GEOTEXTILE UNDER STONE FILL	649.31	
	100					100	0	SM	GEOTEXTILE FOR SILT FENCE	649.51	
	70					70	72.96	SM	GEOTEXTILE FOR FILTER CURTAIN	649.61	
	5					5	26.074	KG	SEED	651.15	
	10					10	3.175	KG	SEED-WINTER RYE	651.17	
	100					100	115.232	KG	FERTILIZER	651.18	

DETAILED SUMMARY OF QUANTITIES

QUANTITIES	UNIT	ITEMS
		EARTHWORKS SUMMARY
		FILL AVAILABLE
536	CM	COMMON EXCAVATION: 536 x1.0
90	CM	UNCLASSIFIED CHANNEL EXCAVATION: 300 x 0.3
35	CM	STRUCTURE EXCAVATION: 115 x 0.3
10	CM	TRENCH EXCAVATION OF EARTH: 10 x 1.0
671	**CM**	**TOTAL**
		FILL REQUIRED
110	CM	PLANIMETERED FILL:
126.5	CM	FACTORED FILL: x 1.15
3.5	CM	ROUNDING
130	**CM**	**TOTAL**
541	**CM**	WASTE: 671 - 130

PROJECT NAME: CORINTH
PROJECT NUMBER: STP BRO 1447(22) (RE-ADVERTISED)

FILE NAME: 93j042\Structures\sj042excel.dgn
PROJECT MANAGER: C.P. WILLIAMS
DESIGNED BY: R.S. YOUNG
QUANTITY SHEET #1
PLOT DATE: 07/16/2008
DRAWN BY: M.FESSEL
CHECKED BY: R.S. YOUNG
SHEET 3 OF 42

STATE OF VERMONT
AGENCY OF TRANSPORTATION

QUANTITY SHEET 2

Metric

SUMMARY OF ESTIMATED QUANTITIES										TOTALS		DESCRIPTIONS			
					ROADWAY	EROSION CONTROL	BRIDGE	100% STP FUNDS	FULL C.E ITEM	GRAND TOTAL	FINAL	UNIT	ITEMS	ITEM NUMBER	ROUND
						1				1	0.249	T	AGRICULTURAL LIMESTONE	651.20	
						1				1	0.37	T	HAYMULCH	651.25	
						100				100	128.5	SM	GRUBBING MATERIAL	651.40	
						1				1	1	LS	EPSC PLAN	652.10	
						40				40	18	HR	MONITORING EPSC PLAN	652.20	
						1				1	0	LU	MAINTENANCE OF EPSC PLAN (N.A.B.I.)	652.30	
						440				440	265.5	SM	TEMPORARY EROSION MATTING	653.20	
						20				20	0	CM	TEMPORARY STONE CHECK DAM, TYPE I	653.25	
						13				13	0	CM	VEHICLE TRACKING PAD	653.35	
						195				195	175	M	PROJECT DEMARCATION FENCE	653.55	
					0.45					0.45	1.53	SM	TRAFFIC SIGNS, TYPE A	675.20	
					3					3	3.66	M	FLANGED CHANNEL SIGN POST	675.301	
					2					2	2	EACH	REMOVING SIGNS	675.50	
							68			68	65.993	CM	SPECIAL PROVISION (HIGH PERFORMANCE CONCRETE, CLASS A LOW CEMENT)	900.608	
								1		1	1	LS	SPECIAL PROVISION (STEEL BRIDGE TRUSS REMOVAL AND DELIVERY)	900.645	
					0					0	1	LS	SUPPLEMENTAL AGREEMENT (INSTALL ELECTRIC FENCE) (C.O. NO. 1 DATED 10-3-09)	900.545	

DETAILED SUMMARY OF QUANTITIES		
QUANTITIES	UNIT	ITEMS

PROJECT NAME: CORINTH
PROJECT NUMBER: STP BRO 1447(22) (RE-ADVERTISED)

FILE NAME: 93j042\Structures\sj042excel.dgn
PROJECT MANAGER: C.P.WILLIAMS
DESIGNED BY: R.S.YOUNG
QUANTITY SHEET #2

PLOT DATE: 07/16/2008
DRAWN BY: M.FESSEL
CHECKED BY: R.S.YOUNG
SHEET 4 OF 42

STATE OF VERMONT
AGENCY OF TRANSPORTATION

QUANTITY SHEET 3

Metric

SUMMARY OF BRIDGE QUANTITIES					TOTALS		DESCRIPTIONS			DETAILED SUMMARY OF QUANTITIES		
ABUT 1	SUPER STRUCTURE	ABUT 2	CHANNEL		BRIDGE TOTAL		UNIT	ITEMS	ITEM NUMBER	QUANTITIES	UNIT	ITEMS
			300		300	257.2	CM	UNCLASSIFIED CHANNEL EXCAVATION	203.27			
57		58			115	115	CM	STRUCTURE EXCAVATION	204.25			
40		40			80	80	CM	GRANULAR BACKFILL FOR STRUCTURES	204.30			
14		14			28	23.168	CM	CONCRETE, HIGH PERFORMANCE CLASS B	501.34			
0.5		0.5			1	1	LS	FURNISHING EQUIPMENT FOR DRIVING PILING	504.10			
80		80			160	164.064	M	STEEL PILING FOR INTEGRAL ABUTMENTS, HP 310 X 93	505.255			
1		1			2	2	EACH	DYNAMIC PILE LOADING TEST	505.45			
	23305				23305	22687	KG	STRUCTURAL STEEL, ROLLED BEAM	506.50			
1475	6046	1476			8997	9472	KG	EPOXY COATED REINFORCING STEEL	507.17			
	1				1	1	LS	SHEAR CONNECTORS (440 - 22 X 178)	508.15			
6	63	6			75	103.85	L	WATER REPELLENT, SILANE	514.10			
	46				46	45.72	M	BRIDGE RAILING, GALVANIZED HD STEEL BEAM/FASCIA MOUNTED	525.41			
	1				1	1	EACH	REMOVAL OF STRUCTURE (77 SM - EST.)	529.15			
4		4			8	8	EACH	BEARING DEVICE ASSEMBLY, INTEGRAL ABUTMENT	531.14			
			120		120	122.5	CM	STONE FILL, TYPE II	613.11			
	68				68	65.993	CM	SPECIAL PROVISION (HIGH PERFORMANCE CONCRETE, CLASS A LOW CEMENT)	900.608			

PROJECT NAME: CORINTH
PROJECT NUMBER: STP BRO 1447(22) (RE-ADVERTISED)

FILE NAME: 93j042\Structures\sj042excel.dgn
PROJECT MANAGER: C.P.WILLIAMS
DESIGNED BY: R.S.YOUNG
QUANTITY SHEET #3

PLOT DATE: 07/16/2008
DRAWN BY: M.FESSEL
CHECKED BY: R.S.YOUNG
SHEET 5 OF 42

GPS CONTROL POINTS

TRAVERSE POINT 1
"CORINTH TEMP 1"
(NOT SHOWN)

N = 167711.2000
E = 520271.8190
Z = 247.670

DESCRIPTION OF TRAVERSE POINT 1

GENERAL LOCATION: SOUTH CORINTH, VT, ABOUT 41.8 km (26 miles) NORTH OF WHITE RIVER JUNCTION, ABOUT 29.0 km (18 miles) SOUTHEAST OF BARRE, AND ABOUT 48.3 km (30 miles) SOUTHWEST OF ST. JOHNSBURY.

TO REACH FROM THE I-91 BRIDGES OVER VT ROUTE 25 IN BRADFORD GO NORTHWEST ALONG VT ROUTE 25 FOR 1.0 km (0.6 miles) TO THE INTERSECTION OF VT ROUTE 25B RIGHT. CONTINUE STRAIGHT AHEAD AND GO NORTHWEST ALONG VT ROUTE 25 FOR 7.2 km (4.5 miles) TO THE INTERSECTION OF COOKEVILLE ROAD LEFT AT A BRIDGE OVER THE WAITS RIVER. TURN LEFT AND GO SOUTHWEST OVER BRIDGE AND ALONG COOKEVILLE ROAD FOR 4.0 km (2.5 miles) TO THE CROSSROADS TRADING POST IN SOUTH CORINTH. CONTINUE STRAIGHT AHEAD ON COOKEVILLE ROAD FOR 2.17 km (1.35 miles) TO THE MARK ON THE LEFT, JUST EAST OF A BEND IN THE ROAD.

THE MARK IS 4.0 m (13.1 ft) SOUTH OF AND ABOUT 0.05m (0.16 ft) LOWER THAN THE CENTERLINE OF COOKEVILLE ROAD, 0.35 m (1.15 ft) SOUTH OF THE SOUTH EDGE OF PAVEMENT, 2.5 m (8.2 ft) NORTH OF A BARB WIRE FENCE, 14.75 m (48.39 ft) SOUTHWEST OF A NAIL IN A 24 cm BALSAM FIR, 14.00 m (45.93 ft) SOUTHEAST OF A NAIL IN A 25cm CHERRY AND 2.4 m (7.9 ft) NORTH OF A WOODEN WITNESS POST.

THE MARK IS A CENTER PUNCHED REBAR SET 3 cm BELOW THE GROUND SURFACE IN THE SHOULDER OF THE ROAD.

TRAVERSE POINT 2
"TT 20 LDJ"
N = 167609.1090
E = 520712.1230
Z = 238.070

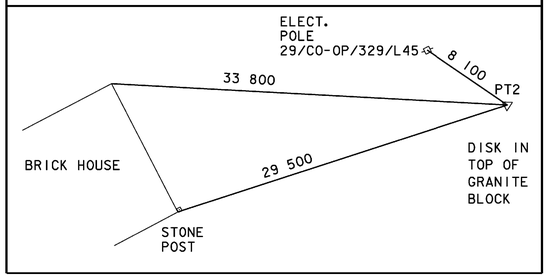

TRAVERSE TIES

TRAVERSE POINT 3
N = 167519.2734
E = 520634.6672
Z = 235.3410

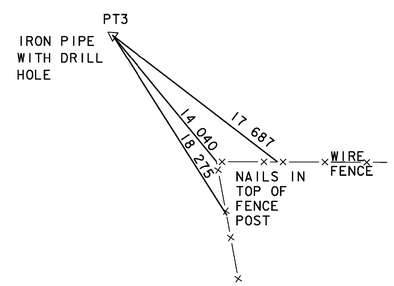

TRAVERSE POINT 4
N = 167345.4149
E = 520555.0571
Z = 236.2130

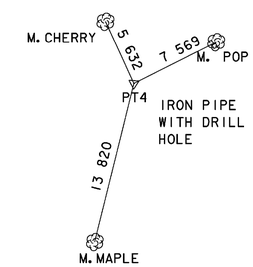

ALIGNMENT TIES

MAIN LINE PC 1+015.476
N = 167346.417
E = 520562.370

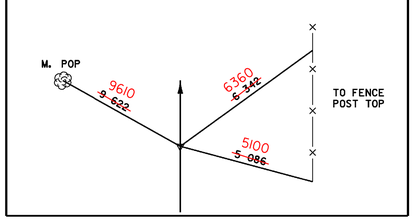

MAIN LINE PT 1+079.667
N = 167407.117
E = 520582.600

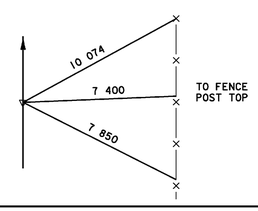

MAIN LINE POT 1+219.500
N = 167532.337
E = 520644.836

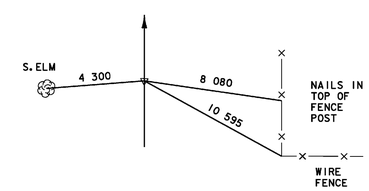

ALL DIMENSIONS IN MILLIMETERS UNLESS OTHERWISE INDICATED.

NOT TO SCALE

DATUM

VERTICAL	NAVD 88
HORIZONTAL	NAD 83/92

PROJECT: CORINTH	PROJECT NO.: STP BRO 1447 (22) (RE-ADVERTISED)
DESIGN FILE NAME: sj042tie.dgn	
IPARM FILE NAME: sj042tie.I	PLOT DATE: 16-JUL-2008
SURVEYED BY: R.D. GILMAN	SURVEY DATE: 3-15-95
SQUAD LEADER: C.P. WILLIAMS	DRAWN BY: R.S. YOUNG
TIE SHEET	SHEET: 6 OF 42

VAOT Metric

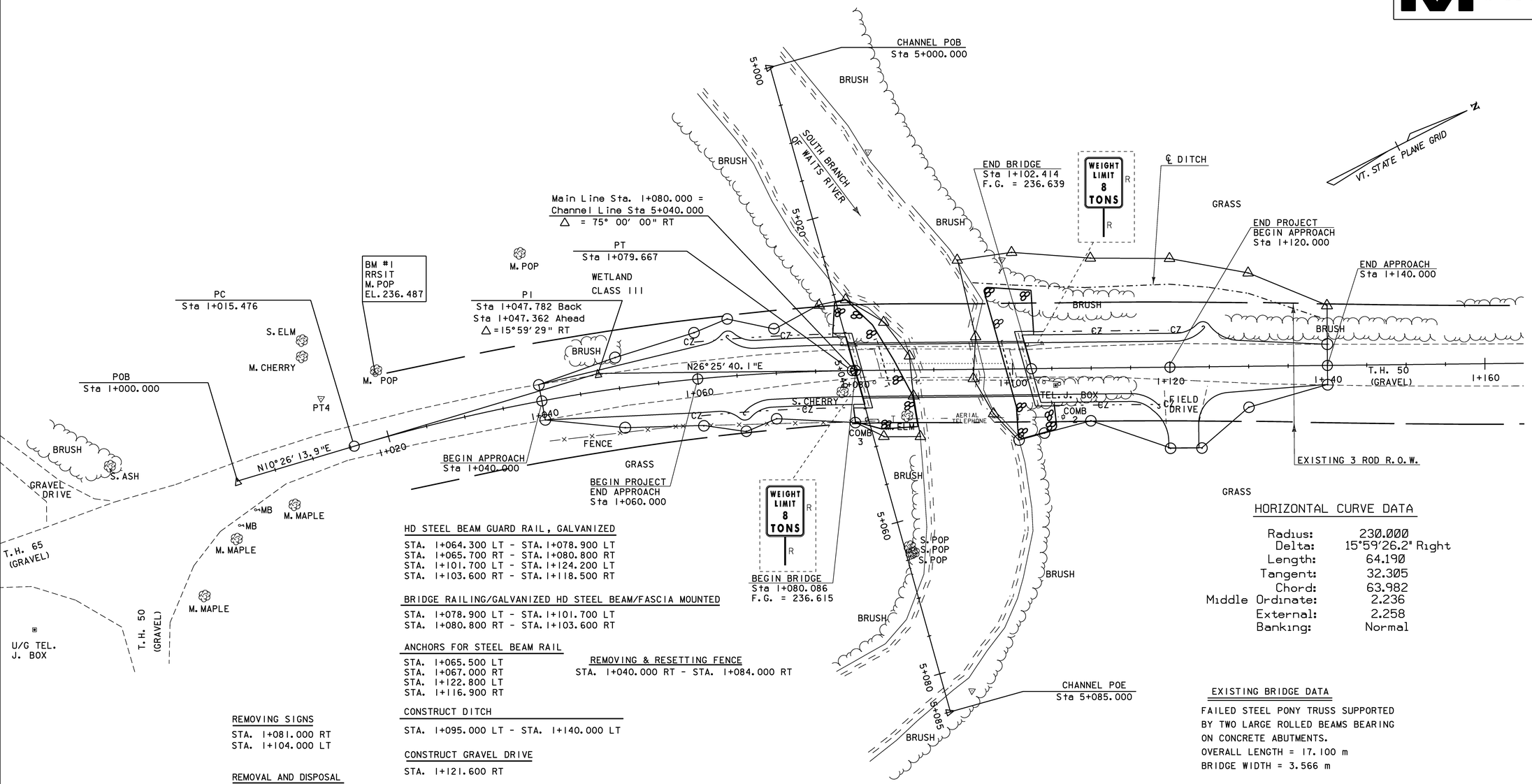

HORIZONTAL CURVE DATA

Radius:	230.000
Delta:	15°59'26.2" Right
Length:	64.190
Tangent:	32.305
Chord:	63.982
Middle Ordinate:	2.236
External:	2.258
Banking:	Normal

EXISTING BRIDGE DATA

FAILED STEEL PONY TRUSS SUPPORTED BY TWO LARGE ROLLED BEAMS BEARING ON CONCRETE ABUTMENTS.
OVERALL LENGTH = 17.100 m
BRIDGE WIDTH = 3.566 m

HD STEEL BEAM GUARD RAIL, GALVANIZED

STA. 1+064.300 LT - STA. 1+078.900 LT
STA. 1+065.700 RT - STA. 1+080.800 RT
STA. 1+101.700 LT - STA. 1+124.200 LT
STA. 1+103.600 RT - STA. 1+118.500 RT

BRIDGE RAILING/GALVANIZED HD STEEL BEAM/FASCIA MOUNTED

STA. 1+078.900 LT - STA. 1+101.700 LT
STA. 1+080.800 RT - STA. 1+103.600 RT

ANCHORS FOR STEEL BEAM RAIL

STA. 1+065.500 LT
STA. 1+067.000 RT
STA. 1+122.800 LT
STA. 1+116.900 RT

REMOVING & RESETTING FENCE

STA. 1+040.000 RT - STA. 1+084.000 RT

CONSTRUCT DITCH

STA. 1+095.000 LT - STA. 1+140.000 LT

CONSTRUCT GRAVEL DRIVE

STA. 1+121.600 RT

REMOVING SIGNS

STA. 1+081.000 RT
STA. 1+104.000 LT

REMOVAL AND DISPOSAL OF GUARD RAIL

STA 1+078.200 LT - 1+080.300 LT
STA 1+080.400 RT - 1+082.600 RT
STA 1+101.700 LT - 1+103.750 LT
STA 1+103.750 RT - 1+106.200 RT

LAYOUT #1

0 10 20
SCALE 1:250

LEGEND
R - REMOVE
RET - RETAIN

PROJECT: CORINTH	PROJECT NO.: STP BRO 1447 (22) (RE-ADVERTISED)
DESIGN FILE NAME: sj042bdr.dgn	
IPARM FILE NAME: sj042lal.l	PLOT DATE: 16-JUL-2008
SURVEYED BY: R.D. GILMAN	SURVEY DATE: 3-15-95
SQUAD LEADER: C.P. WILLIAMS	DRAWN BY: P. ROWE
LAYOUT SHEET 1	SHEET: 7 OF 42

Metric

ELECT.
POLE
329/L44/L

GUY
WIRE

VT. STATE PLANE GRID

TRAFFIC SIGN, TYPE A
STA. ~~1+265.000 LT~~ (VR-017)
1+298.000 LT

LEGAL LOAD
LIMIT
24,000
POUNDS
N
N

POT
Sta. 1+219.500

POE
Sta 1+266.350

TO GOOSE GREEN

760 MM
CGMP

BRUSH

S. ELM

PT3

N26°25' 40.1"E

1+180 1+200 1+220 1+240 1+260 1+266

T. H. 50 (GRAVEL)

T. H. 2
(PAVED)

BEAR NOTCH ROAD
RET

TO SOUTH CORINTH

TEL.
J. BOX

L. POP

S. SPRUCE

WIRE
FENCE

S. APPLE

M. MAPLE

MB

M. MAPLE

M. MAPLE

WALL

GRAVEL DRIVE

ELECT.
POLE
29/CO-OP/329/L45

PT2

M. ASH

M. ASH

BRICK HOUSE

STONE
POST

TT 20 LDJ
USGS
BM DISK
IN GRANITE POST
EL. 238.070

S. CHERRY

LAYOUT #2

0 10 20

SCALE 1:250

LEGEND
N - NEW
R - REMOVE
RET - RETAIN

DATUM
VERTICAL NAVD 88
HORIZONTAL NAD 83/92

PROJECT: CORINTH	PROJECT NO.: STP BRO 1447 (22) (RE-ADVERTISED)
DESIGN FILE NAME: sj042bdr.dgn	
IPARM FILE NAME: sj042la2.1	PLOT DATE: 16-JUL-2008
SURVEYED BY: R. D. GILMAN	SURVEY DATE: 3-15-95
SQUAD LEADER: C.P.WILLIAMS	DRAWN BY: P.ROWE
LAYOUT SHEET #2	SHEET: 8 OF 42

Profile TH 50

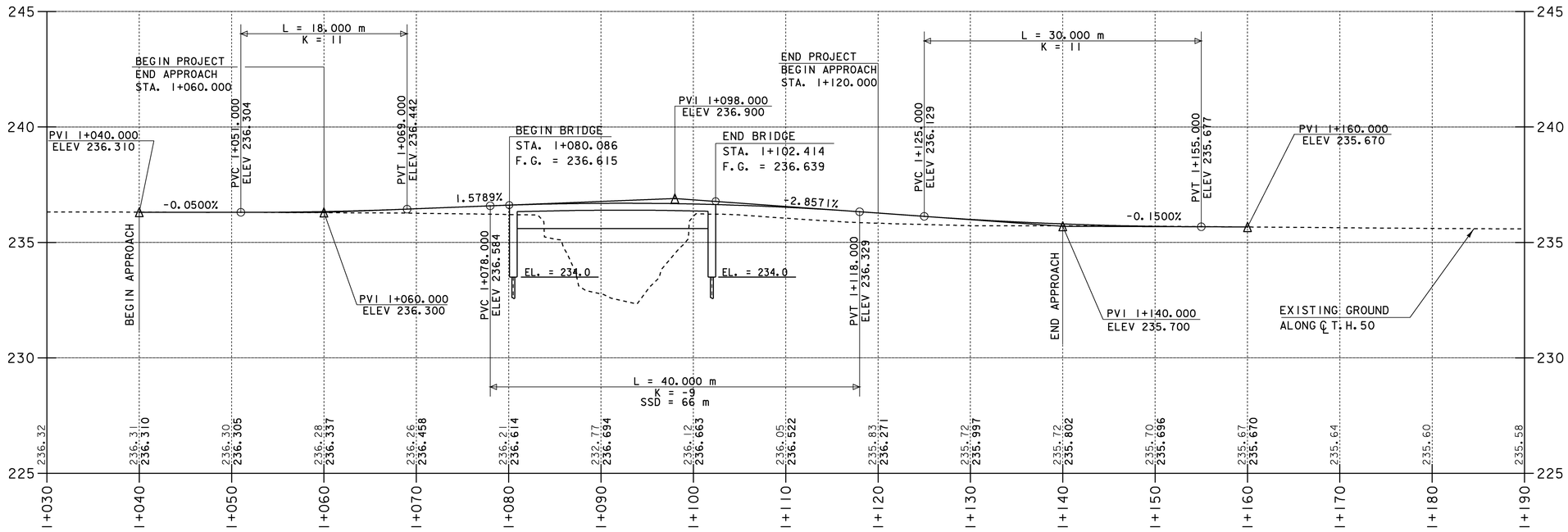

ELEVATIONS IN THOUSANDTHS ARE PROPOSED FINISH GRADE ALONG CENTERLINE
ELEVATIONS IN HUNDREDTHS ARE EXISTING GROUND ALONG CENTERLINE

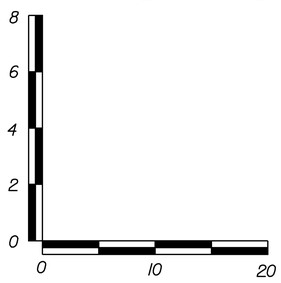

HORIZONTAL SCALE 1:250
VERTICAL SCALE 1:100

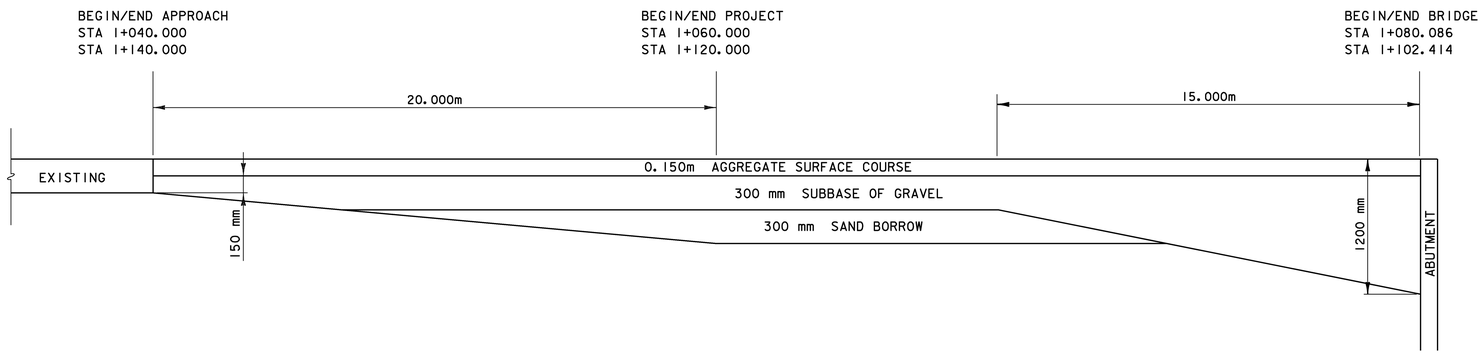

MATERIAL TRANSITION DIAGRAM

NOT TO SCALE

DATUM	
VERTICAL	NAVD 88
HORIZONTAL	NAD 83/92

PROJECT: CORINTH	PROJECT NO.: STP BRO 1447 (22) (RE-ADVERTISED)
DESIGN FILE NAME: sj042xs2.dgn	
IPARM FILE NAME: sj042pro.I	PLOT DATE: 16-JUL-2008
SURVEYED BY: R.D. GILMAN	SURVEY DATE: 3-15-95
SQUAD LEADER: C.P. WILLIAMS	DRAWN BY: P. ROWE
PROFILE SHEET	SHEET: 9 OF 42

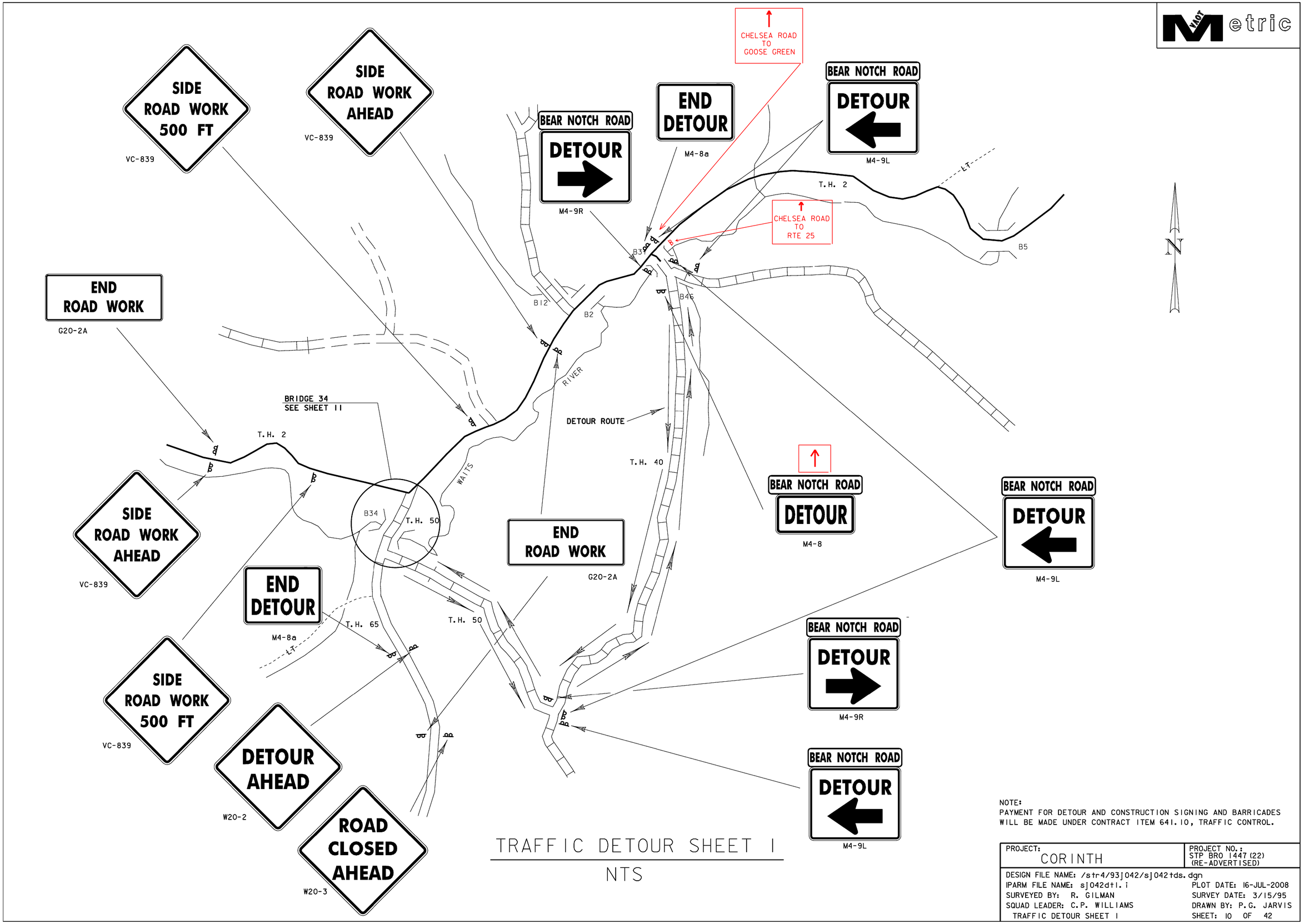

TRAFFIC DETOUR SHEET 1

NTS

NOTE:
PAYMENT FOR DETOUR AND CONSTRUCTION SIGNING AND BARRICADES WILL BE MADE UNDER CONTRACT ITEM 641.10, TRAFFIC CONTROL.

PROJECT: CORINTH	PROJECT NO.: STP BRO 1447(22) (RE-ADVERTISED)
DESIGN FILE NAME: /str4/93j042/sj042tds.dgn	
IPARM FILE NAME: sj042dtl.i	PLOT DATE: 16-JUL-2008
SURVEYED BY: R. GILMAN	SURVEY DATE: 3/15/95
SQUAD LEADER: C.P. WILLIAMS	DRAWN BY: P.G. JARVIS
TRAFFIC DETOUR SHEET 1	SHEET: 10 OF 42

Metric

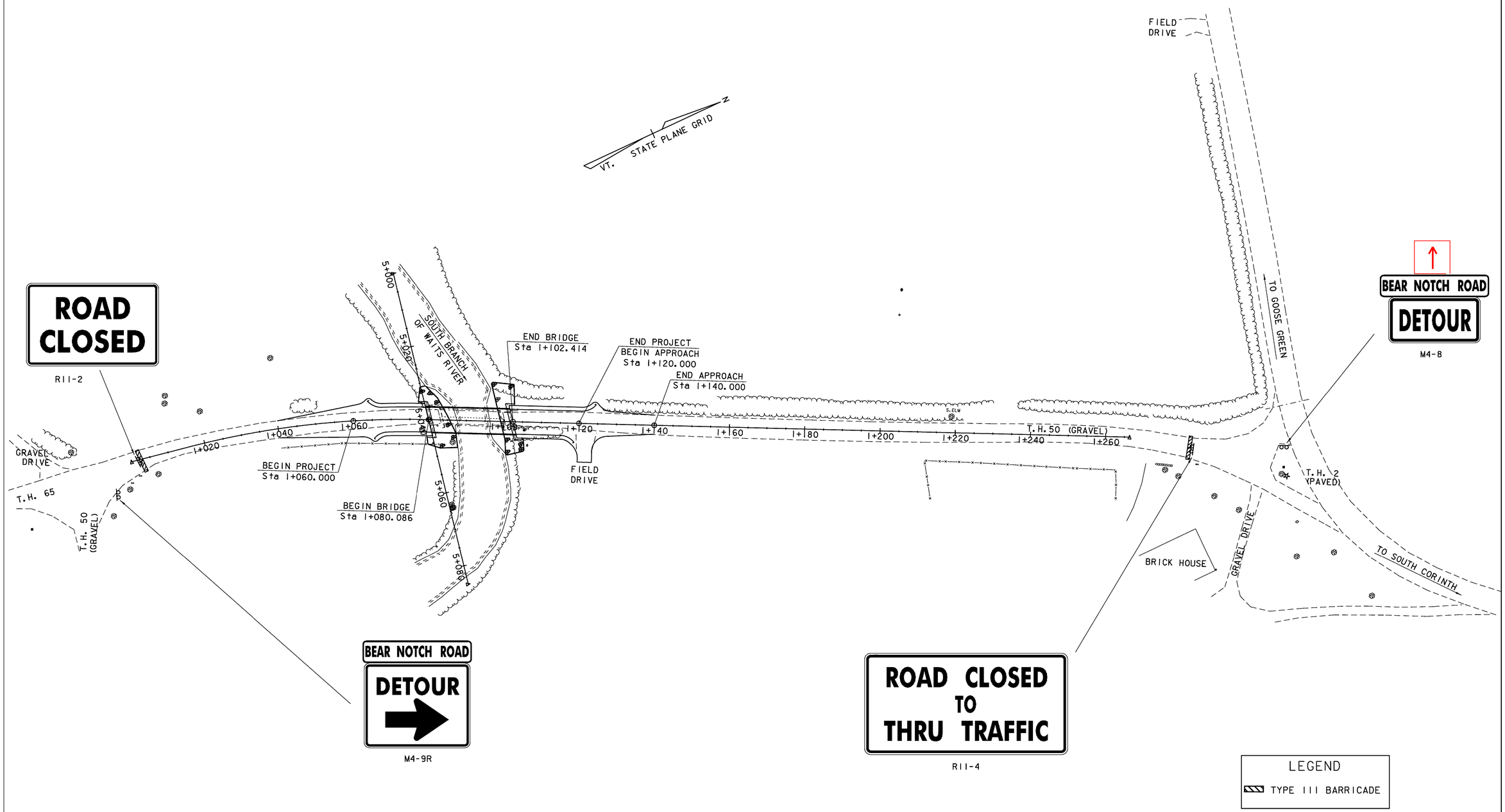

TRAFFIC DETOUR SHEET 2

NTS

PROJECT: CORINTH	PROJECT NO.: STP BRO 1447 (22) (RE-ADVERTISED)
DESIGN FILE NAME: /str4/93j042/sj042tds.dgn	
IPARM FILE NAME: sj042dt2.i	PLOT DATE: 16-JUL-2008
SURVEYED BY: R. GILMAN	SURVEY DATE: 3/15/95
SQUAD LEADER: C.P. WILLIAMS	DRAWN BY: P.G. JARVIS
TRAFFIC DETOUR SHEET 2	SHEET: 11 OF 42

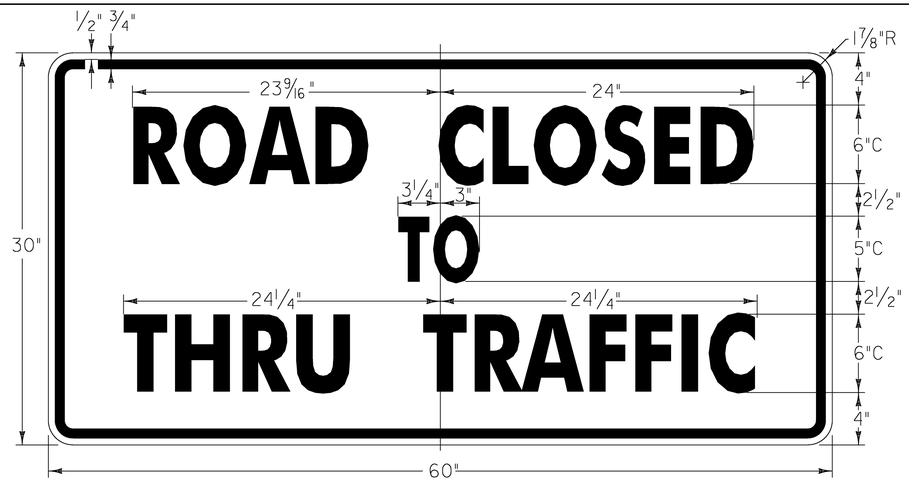

RII-4
BLACK TEXT & BORDER
WITH ORANGE BACKROUND

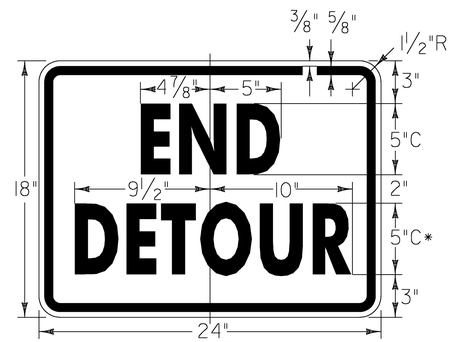

M4-8a
BLACK TEXT & BORDER
WITH ORANGE BACKROUND
* REDUCE SPACING BY 25%

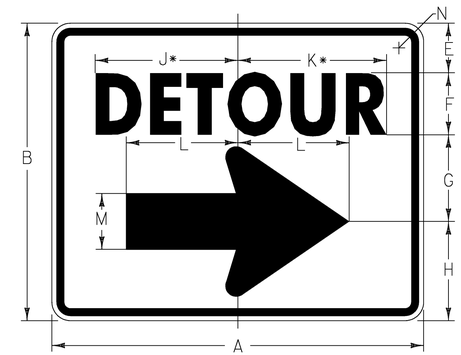

M4-9(R)
BLACK TEXT & BORDER
WITH ORANGE BACKROUND

SIGN	DIMENSIONS (INCHES)												
	A	B	C	D	E	F	G	H	J	K	L	M	N
STD.	30	24	3/8	5/8	4	5D	7	8	11 1/2	12	9	4 1/2	1 1/2
SPECIAL	48	36	5/8	7/8	6	8D	10	12	19 1/2	20 1/4	13 1/2	7	2 1/4
SPECIAL	60	48	3/4	1 1/4	8	10D	14	16	23	24	18	9	3

* REDUCE SPACING 40%

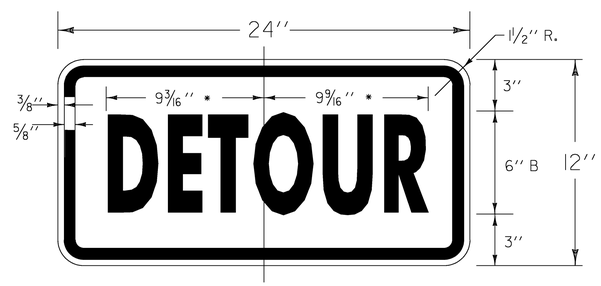

M4-8

* REDUCE TEXT 20 %

COLORS

LEGEND - BLACK (NON-REFL.)
BACKGROUND - ORANGE (REFL.)
MATERIALS :
SEE STD. E-136

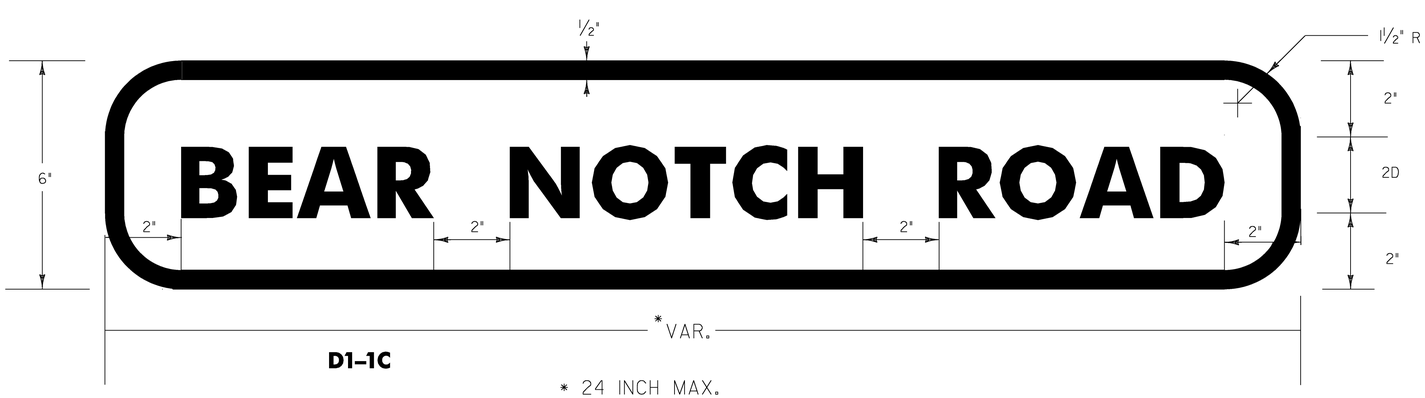

D1-1C

* 24 INCH MAX.

SEE STANDARD E-100 FOR MATERIALS & COLORS

TRAFFIC DETOUR SIGN DETAILS

NTS

PROJECT: CORINTH	PROJECT NO.: STP BRO 1447(22) (RE-ADVERTISED)
DESIGN FILE NAME: /str4/93j042/sj042tds.dgn	
IPARM FILE NAME: sj042dt3.i	PLOT DATE: 16-JUL-2008
SURVEYED BY: R. GILMAN	SURVEY DATE: 3/15/95
SQUAD LEADER: C.P. WILLIAMS	DRAWN BY: P.G. JARVIS
TRAFFIC DETOUR SHEET 3	SHEET: 12 OF 42

STATE OF VERMONT
AGENCY OF TRANSPORTATION

TRAFFIC SIGN SUMMARY SHEET

Metric

KILOMETER MARKER, STATION, OR SIGN NUMBER	SIGN LEGEND	SIGN DIMENSIONS EA	SIGN DIMENSIONS WIDTH (mm)	SIGN DIMENSIONS HEIGHT (mm)	NEW & SALVAGED SIGNS "A"	NEW & SALVAGED SIGNS "B"	NEW & SALVAGED SIGNS SALV SIGN	NEW & SALVAGED SIGNS SALV TIS	EXIST POST RETAIN	EXIST POST SALVAGE	NEW SIGN POSTS NO. OF POSTS	FLANGED CHANNEL kg/m 1.7	FLANGED CHANNEL kg/m 3.0	FLANGED CHANNEL kg/m 4.5	SQUARE STEEL (mm) kg/m 44	SQUARE STEEL (mm) kg/m 50	SQUARE STEEL (mm) kg/m 63	ANCHOR	SLEEVE	TUBULAR ALUMINUM Ø (mm) kg/m 75	TUBULAR ALUMINUM Ø (mm) kg/m 100	TUBULAR ALUMINUM Ø (mm) kg/m 100 MOD	FOUND-ATION	TUBULAR STEEL Ø (mm) kg/m 75	TUBULAR STEEL Ø (mm) kg/m 89	TUBULAR STEEL Ø (mm) kg/m 100	TUBULAR STEEL Ø (mm) kg/m 125	W-SHAPE STEEL FTG. SIZE 600 mm	W-SHAPE STEEL FTG. SIZE 750 mm	W-SHAPE STEEL WEIGHT	W-SHAPE STEEL POST SIZE	SIGN FRAME REQUIRED	REMARKS	SIGN DETAIL DETAIL ON SHEET NUMBER	SIGN DETAIL STD. SHEET NUMBER
												OPTION ITEMS																								
1+298.000 LT ~~1+265.000 LT~~	LEGAL LOAD LIMIT 24,000 POUNDS	1	600	750							1	3																					VR-017		
TOTALS		m^2 0.450	m^2	EA. 1	m^2							m 3			m				EA	kg				kg										EA.	EA.	kg

FINAL POST LENGTHS ARE TO BE DETERMINED IN THE FIELD. POST SIZES ARE COMPUTED BASED ON INFORMATION FURNISHED ON THE STANDARD SHEETS AND THE TRAFFIC & SAFETY DIVISION'S 'SIGN POST DESIGN GUIDELINE.'

PROJECT NAME: CORINTH
PROJECT NUMBER: STP BRO 1447(22)(RE-ADVERTISED)

FILE NAME: 93J042/Str/sJ042trf.dgn
PROJECT LEADER: C.P.WILLIAMS
DESIGNED BY: R.S.YOUNG
TRAFFIC SIGN SUMMARY SHEET

PLOT DATE: 16-JUL-2008
DRAWN BY: M.FESSEL
CHECKED BY: R.S.YOUNG
SHEET 13 OF 42

SOIL CLASSIFICATION

AASHTO	
A1	Gravel and Sand
A3	Fine Sand
A2	Silty or Clayey Gravel and Sand
A4	Silty Soil - Low Compressibility
A5	Silty Soil - Highly Compressible
A6	Clayey Soil - Low Compressibility
A7	Clayey Soil - Highly Compressible

ROCK QUALITY DESIGNATION

R.Q.D. (%)	ROCK DESCRIPTION
<25	Very Poor
25 to 50	Poor
51 to 75	Fair
76 to 90	Good
>90	Excellent

SHEAR STRENGTH

UNDRAINED SHEAR STRENGTH IN kPa	CONSISTENCY
<12	Very Soft
12-24	Soft
24-48	Med. Stiff
48-96	Stiff
96-192	Very Stiff
>192	Hard

CORRELATION GUIDE OF "N" TO DENSITY/CONSISTENCY

DENSITY (GRANULAR SOILS) N	DESCRIPTIVE TERM	CONSISTENCY (COHESIVE SOILS) N	DESCRIPTIVE TERM
<5	Very Loose	<2	Very Soft
5-10	Loose	2-4	Soft
11-24	Med. Dense	5-8	Med. Stiff
25-50	Dense	9-15	Stiff
>50	Very Dense	16-30	Very Stiff
		31-60	Hard
		>60	Very Hard

COMMONLY USED SYMBOLS

▼	Water Elevation
⊗	Standard Penetration Boring
⊕	Auger Boring
⊙	Rod Sounding
S	Sample
N	Standard Penetration Test Blow Count Per 300 mm For: 50.8 mm O.D. Sampler 35.0 mm I.D. Sampler Hammer Weight Of 63.5 kg. Hammer Fall Of 762 mm
VS	Field Vane Shear Test
US	Undisturbed Soil Sample
B	Blast
DC	Diamond Core
MD	Mud Drill
WA	Wash Ahead
HSA	Hollow Stem Auger
AX	Core Size 30.1mm
BX	Core Size 42.0 mm
NX	Core Size 54.7 mm
M	Double Tube Core Barrel Used
LL	Liquid Limit
PL	Plastic Limit
PI	Plasticity Index
NP	Non Plastic
w	Moisture Content (Dry Wgt. Basis)
D	Dry
M	Moist
MTW	Moist To Wet
W	Wet
Sat	Saturated
Bo	Boulder
Gr	Gravel
Sa	Sand
Si	Silt
Cl	Clay
HP	Hardpan
Le	Ledge
NLTD	No Ledge To Depth
CNPF	Can Not Penetrate Further
TLOB	To Ledge Or Boulder
NR	No Recovery
Rec.	Recovery
%Rec.	Percent Recovery
RQD	Rock Quality Designation
CBR	California Bearing Ratio
<	Less Than
>	Greater Than
R	Refusal (N > 100)

COLOR

blk	Black	pnk	Pink
bl	Blue	pu	Purple
brn	Brown	rd	Red
dk	Dark	tn	Tan
gry	Gray	wh	White
gn	Green	yel	Yellow
lt	Light	mltc	Multicolored
or	Orange		

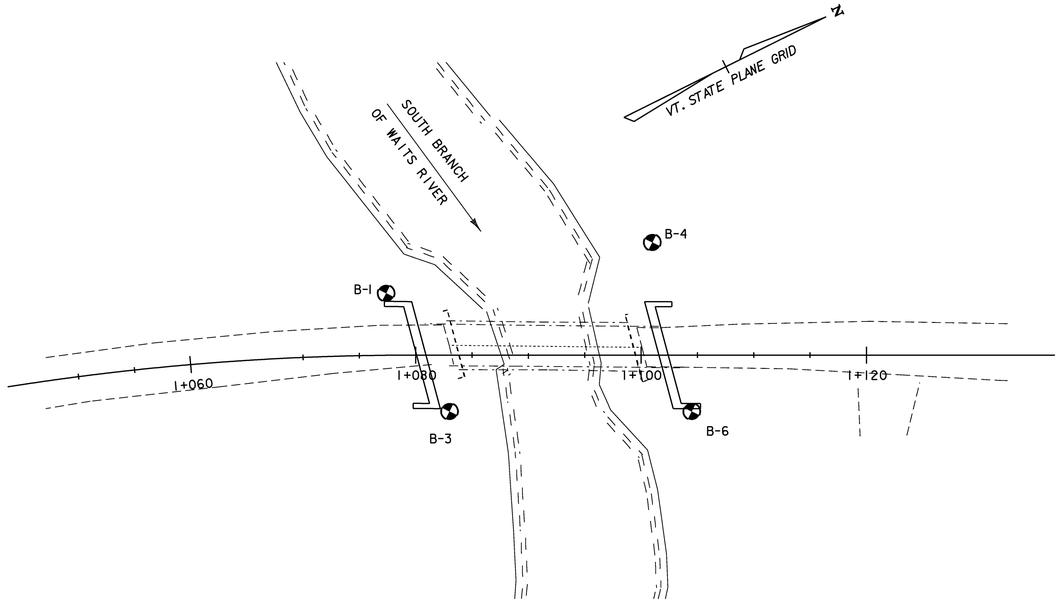

BORING CHART

HOLE NO.	STATION	OFFSET (m)	GROUND ELEV.	TLOB
B-1	1+077.500	5.500 LT	235.500	215.000
B-3	1+083.000	5.000 RT	235.174	214.174
B-4	1+101.000	10.000 LT	234.796	212.796
B-6	1+104.500	5.000 RT	235.299	212.199

DEFINITIONS (AASHTO)

BEDROCK (LEDGE) - Rock in its native location of indefinite thickness.

BOULDER - A rock fragment with an average dimension > 304.8 mm.

COBBLE - Rock fragments with an average dimension between 76.2 and 304.8 mm.

GRAVEL - Rounded particles of rock < 76.2 mm and > 2 mm (#10 sieve).

SAND - Particles of rock < 2 mm (#10 sieve) and > 75 μm (#200 sieve).

SILT - Soil < 75 μm (#200 sieve), non or slightly plastic and exhibits no strength when air-dried.

CLAY - Fine grained soil, exhibits plasticity when moist and considerable strength when air-dried.

VARVED - Alternate layers of silt and clay.

HARDPAN - Extremely dense soil, cemented layer, not softened when wet.

MUCK - Soft organic soil (containing > 10% organic material.

MOISTURE CONTENT - Weight of water divided by dry weight of soil.

FLOWING SAND - Granular soil so saturated (loose) that it flows into drill casing during extraction of wash rod.

STRIKE - Angle from magnetic north to line of intersection of bed with a horizontal plane.

DIP - Inclination of bed with a horizontal plane.

GENERAL NOTES

1. The subsurface explorations shown herein were made between 10/15/97 and 11/21/97 by the Agency.
2. Soil and rock classifications, properties and descriptions are based on engineering interpretation from available subsurface information by the Agency and may not necessarily reflect actual variations in subsurface conditions that may be encountered between individual boring or sample locations.
3. Observed water levels and/or conditions indicated are as recorded at the time of exploration and may vary according to the prevailing rainfall, methods of exploration and other factors.
4. Engineering judgement was exercised in preparing the subsurface information presented herein. Analysis and interpretation of subsurface data was performed and interpreted for Agency design and estimating purposes. Presentation of the information in the Contract is intended to provide the Contractor access to the same data available to the Agency. The subsurface information is presented in good faith and is not intended as a substitute for personal investigation, independent interpretation, independent analysis or judgement by the Contractor.
5. Pictorial structure details shown on the boring plan layout or soils profile are for illustrative purposes only and may not accurately portray final contract details.
6. Terminology used on boring logs to describe the hardness, degree of weathering, and spacing of fractures, joints and other discontinuities in the bedrock is defined in the AASHTO Manual on Subsurface Investigations, 1988.

0 10 20
SCALE 1:250

PROJECT: CORINTH	PROJECT NO.: STP BRO 1447 (22) (RE-ADVERTISED)
DESIGN FILE NAME: M:\Projects\93J042\Structures\sJ042bor.dgn	
IPARM FILE NAME: sJ042bol.1	PLOT DATE: 16-JUL-2008
BORING LAYOUT	
	SHEET: 14 OF 42

STATE OF VERMONT
AGENCY OF TRANSPORTATION
MATERIALS & RESEARCH DIVISION
SUBSURFACE INFORMATION

HOLE NO.: B-1
SHEET 1 OF 2
DATE STARTED: 10/21/97
DATE COMPLETED: 10/29/97

PROJECT NAME: CORINTH
SITE NAME: BR* 34
STATION: 1+077.50
GROUND EL.: 235.500

PROJECT NUMBER: BRO 1447(22)
SITE NO.: TH *50
OFFSET: -5.50
G.W. DEPTH: 1.5

BORING CREW
CREW CHIEF: WILLIS
DRILLER: TALLMAN R
LOGGER:
ADDITIONAL CREW:

BORING RIG: TRUCK
BORING TYPE: WASH BORE
SAMPLE TYPE: SPLIT BARREL

DEPTH	SYMBOL	CLASSIFICATION OF MATERIALS (Description)	BLOWS PER 0.3 m	M.C. %	GRAVEL %	SAND %	FINES %	LL	PI
▽		A-1-b, GrSa, brn, Moist, Rec. = 0.30m	4	17.6	25.3	69.1	5.6		
		No Rec.	4						
5		A-1-a, SaGr, brn, MTW, Rec. = 0.10m	14	NA	56.1	36.3	7.6		
		A-2-4, SiSa, gry, Wet, Rec. = 0.43m	7	22.1		73.4	26.6		
		A-2-4, SiSa, gry, Moist, Rec. = 0.37m	10	23.2		72.2	27.8		
		A-4, Si, gry, Wet, Rec. = 0.60m	3	32.3		3	97	24	2
10		A-4, Si, gry, Wet, Rec. = 0.45m	4	24.9		17	83		
		A-3, Sa, gry, Wet, Rec. = 0.23m	15	23	0	96	4		
		A-3, Sa, gry, Wet, Rec. = 0.33m	27	20.7	4.9	89.2	5.9		
15									

GEOLOGISTS REPORT: See next sheet.

ESTIMATED PILE TIP

STATE OF VERMONT
AGENCY OF TRANSPORTATION
MATERIALS & RESEARCH DIVISION
SUBSURFACE INFORMATION

HOLE NO.: B-1
SHEET 2 OF 2
DATE STARTED: 10/21/97
DATE COMPLETED: 10/29/97

PROJECT NAME: CORINTH
SITE NAME: BR* 34
STATION: 1+077.50
GROUND EL.: 235.500

PROJECT NUMBER: BRO 1447(22)
SITE NO.: TH *50
OFFSET: -5.50
G.W. DEPTH: 1.5

BORING CREW
CREW CHIEF: WILLIS
DRILLER: TALLMAN R
LOGGER:
ADDITIONAL CREW:

BORING RIG: TRUCK
BORING TYPE: WASH BORE
SAMPLE TYPE: SPLIT BARREL

DEPTH	SYMBOL	CLASSIFICATION OF MATERIALS (Description)	BLOWS PER 0.3 m	M.C. %	GRAVEL %	SAND %	FINES %	LL	PI
		A-2-4, Sa, gry, Wet, Rec. = 0.30m	33	18.1	11.3	75.3	13.4		
		BXDC, 15.8m-16.3m, Boulders							
		A-1-a, SaGr, gry, Wet, Rec. = 0.15m	R	8.1	58.8	32.7	8.5		
		A-1-b, SiSaGr, gry, Wet, Rec. = 0.03m	R	10.9	46.2	30.6	23.2		
20		A-4, Si HP, gry, Wet, Rec. = 0.28m	R	19.4	9.8	10.4	79.8		
		Top of bedrock @ 20.5m							
		Run #1: BXMDC, 20.5m-22.0m, Rec. = 1.48m, See Geologist's Report.	RUN 1	REC % 99	RQD % 0	Dip° 5-20			
		Run #2: BXMDC, 22.0m-23.5m, Rec. = 1.50m, See Geologist's Report.	2	100	15	5-20			
		Hole stopped @ 23.5m							
25									

GEOLOGISTS REPORT:

Run #1: Gray schist with thin limestone (interbedded).
Hard to very hard. Unweathered.
Poor RQD due to mechanical breakage during drilling.

Run #2: Same as Run #1.

STATE OF VERMONT
AGENCY OF TRANSPORTATION
MATERIALS & RESEARCH DIVISION
SUBSURFACE INFORMATION

HOLE NO.: B-3
SHEET 1 OF 2
DATE STARTED: 10/30/97
DATE COMPLETED: 11/4/97

PROJECT NAME: CORINTH
SITE NAME: BR* 34
STATION: 1+083.00
GROUND EL.: 235.174

PROJECT NUMBER: BRO 1447(22)
SITE NO.: TH *50
OFFSET: 5.00
G.W. DEPTH: 1.7

BORING CREW
CREW CHIEF: WILLIS
DRILLER: TALLMAN R
LOGGER:
ADDITIONAL CREW:

BORING RIG: TRUCK
BORING TYPE: WASH BORE
SAMPLE TYPE: SPLIT BARREL

DEPTH	SYMBOL	CLASSIFICATION OF MATERIALS (Description)	BLOWS PER 0.3 m	M.C. %	GRAVEL %	SAND %	FINES %	LL	PI
▽		A-1-b, GrSa, gry, Moist, Rec. = 0.30m, Sample included some wood (root).	11	54.4	35.8	57.3	6.9		
		A-3, GrSa, brn, Moist, Rec. = 0.36m	14	18.8	25.2	71	3.8		
5		A-4, Si, gry, Wet, Rec. = 0.24m	5	25		14.5	85.5		
		A-2-4, SiSa, gry, Wet, Rec. = 0.45m	2	20.8		66.4	33.6		
		A-2-4, Sa, gry, Moist, Rec. = 0.30m	40	22	0.6	88.3	11.1		
		A-4, Si, gry, Wet, Rec. = 0.60m	5	19.8		10	90		
10		A-4, Si, gry, Wet, Rec. = 0.60m	4	27.6		3	97	25	4
		A-4, SaSi, gry, Wet, Rec. = 0.30m	13	30.2	1.8	27.3	70.9		
		A-2-4, SiSa, gry, Wet, Rec. = 0.32m	74	20.6	13.2	66.4	20.4		
15									

GEOLOGISTS REPORT: See next sheet.

ESTIMATED PILE TIP

STATE OF VERMONT
AGENCY OF TRANSPORTATION
MATERIALS & RESEARCH DIVISION
SUBSURFACE INFORMATION

HOLE NO.: B-3
SHEET 2 OF 2
DATE STARTED: 10/30/97
DATE COMPLETED: 11/4/97

PROJECT NAME: CORINTH
SITE NAME: BR* 34
STATION: 1+083.00
GROUND EL.: 235.174

PROJECT NUMBER: BRO 1447(22)
SITE NO.: TH *50
OFFSET: 5.00
G.W. DEPTH: 1.7

BORING CREW
CREW CHIEF: WILLIS
DRILLER: TALLMAN R
LOGGER:
ADDITIONAL CREW:

BORING RIG: TRUCK
BORING TYPE: WASH BORE
SAMPLE TYPE: SPLIT BARREL

DEPTH	SYMBOL	CLASSIFICATION OF MATERIALS (Description)	BLOWS PER 0.3 m	M.C. %	GRAVEL %	SAND %	FINES %	LL	PI
		A-4, GrSiSa, gry, Moist, Rec. = 0.39m	69	19.5	24	39.3	36.7		
		A-1-b, GrSa, gry, Wet, Rec. = 0.50m	43	12.9	44.6	50.1	5.3		
		A-1-a, SaGr, gry, Wet, Rec. = 0.12m	R	10.4	69.9	21.8	8.3		
		BXMDC, 18.24m-19.5m, Boulders							
20		A-1-b, SaSiGr, gry, Wet, Rec. = 0.15m	R	10	52	23.8	24.2		
		Top of bedrock @ 21.0m							
		Run #1: BXMDC, 21.0m-22.5m, Rec. = 1.5m, See Geologist's Report.	RUN 1	REC % 100	RQD % 23	Dip° 10-30			
		Run #2: BXMDC, 22.5m-24.0m, Rec. = 1.49m, See Geologist's Report.	2	99	0	5-20			
		Hole stopped @ 24.0m							
25									

GEOLOGISTS REPORT:

Run #1: Gray schist with thin interbedded limestone. Hard to very hard.
Unweathered.
Poor RQD due to mechanical breakage during drilling.

Run #2: Same as Run #1 except less limestone.

Metric

PROJECT: CORINTH	PROJECT NO.: STP BRO 1447 (22) (RE-ADVERTISED)
DESIGN FILE NO: /matres/93j042/mj042bor.dgn IPARM FILE NAME:	PLOT DATE: 16-JUL-2008
DRAWN BY: J. TOUCHETTE	SQUAD LEADER: C.C.BENDA
BORING LOGS	SHEET: 15 OF 42

STATE OF VERMONT
AGENCY OF TRANSPORTATION
MATERIALS & RESEARCH DIVISION
SUBSURFACE INFORMATION

HOLE NO.: B-4
SHEET 1 OF 2
DATE STARTED: 11/5/97
DATE COMPLETED: 11/21/97

PROJECT NAME: CORINTH
SITE NAME: BR* 34
STATION: 1+101.00
GROUND EL.: 234.796

PROJECT NUMBER: BRO 1447(22)
SITE NO.: TH *50
OFFSET: -10.00
G.W. DEPTH:

BORING CREW
CREW CHIEF: WILLIS
DRILLER: TALLMAN R
LOGGER:
ADDITIONAL CREW:

BORING RIG: TRUCK
BORING TYPE: WASH BORE
SAMPLE TYPE: SPLIT BARREL

DEPTH	SYMBOL	CLASSIFICATION OF MATERIALS (Description)	BLOWS PER 0.3 m	M.C. %	GRAVEL %	SAND %	FINES %	LL	PI
		A-1-a, SaGr, brn, Wet, Rec. = 0.15m	18		64.5	30	5.5		
		No Rec.	8						
5		No Rec.	7						
		No Rec.	10						
		A-4, SiSa, gry, Wet, Rec. = 0.45m	11	23.4	1	63.5	35.5		
		A-4, SaSi, gry, Wet, Rec. = 0.40m	6	23		26.3	73.7		
10		A-4, SaSi, gry, Wet, Rec. = 0.60m	9	26.5		19.8	80.2		
		A-4, Si, gry, Wet, Rec. = 0.60m	4	29.2		2.7	97.3	24	2
		A-4, Si, gry, Wet, Rec. = 0.60m	9	30.5		4.9	95.1	24	1
15									

GEOLOGISTS REPORT: See next sheet.

STATE OF VERMONT
AGENCY OF TRANSPORTATION
MATERIALS & RESEARCH DIVISION
SUBSURFACE INFORMATION

HOLE NO.: B-4
SHEET 2 OF 2
DATE STARTED: 11/5/97
DATE COMPLETED: 11/21/97

PROJECT NAME: CORINTH
SITE NAME: BR* 34
STATION: 1+101.00
GROUND EL.: 234.796

PROJECT NUMBER: BRO 1447(22)
SITE NO.: TH *50
OFFSET: -10.00
G.W. DEPTH:

BORING CREW
CREW CHIEF: WILLIS
DRILLER: TALLMAN R
LOGGER:
ADDITIONAL CREW:

BORING RIG: TRUCK
BORING TYPE: WASH BORE
SAMPLE TYPE: SPLIT BARREL

ESTIMATED PILE TIP

DEPTH	SYMBOL	CLASSIFICATION OF MATERIALS (Description)	BLOWS PER 0.3 m	M.C. %	GRAVEL %	SAND %	FINES %	LL	PI
		A-4, Si, gry, Wet, Rec. = 0.60m	3	27.1		6.8	93.2		
		No Rec.	23						
		A-1-b, SiSaGr, gry, Wet, Rec. = 0.15m	R	12.2	46.3	31	22.7		
20		A-6, SiCl, gry, Wet, Rec. = 0.20m	R	14.1		6.3	93.7	30	11
		A-4, SaGrSi, gry, Moist, Rec. = 0.15m	R	8.1	32.7	28.1	39.2		
		Top of bedrock @ 22.0m							
		Run #1: BXMDC, 22.0m-23.5m, Rec. = 1.35m, See Geologist's Report.	1	90	25	5-25			
		Run #2: BXMDC, 23.5m-25.0m, Rec. = 1.26m, See Geologist's Report.	2	84	30	5-25			
25		Hole stopped @ 25.0m							

GEOLOGISTS REPORT:

Run #1: Gray schist with thin interbedded limestone. Hard to very hard. Unweathered.
Poor RQD due to mechanical breakage during drilling.

Run #2: Same as Run #1.

STATE OF VERMONT
AGENCY OF TRANSPORTATION
MATERIALS & RESEARCH DIVISION
SUBSURFACE INFORMATION

HOLE NO.: B-6
SHEET 1 OF 2
DATE STARTED: 10/15/97
DATE COMPLETED: 10/20/97

PROJECT NAME: CORINTH
SITE NAME: BR* 34
STATION: 1+104.50
GROUND EL.: 235.299

PROJECT NUMBER: BRO 1447(22)
SITE NO.: TH *50
OFFSET: 5.00
G.W. DEPTH: 1.8

BORING CREW
CREW CHIEF: TALLMAN .
DRILLER: WILLIS
LOGGER: GAMMELL .
ADDITIONAL CREW:

BORING RIG: TRUCK
BORING TYPE: WASH BORE
SAMPLE TYPE: SPLIT BARREL

ESTIMATED PILE TIP

DEPTH	SYMBOL	CLASSIFICATION OF MATERIALS (Description)	BLOWS PER 0.3 m	M.C. %	GRAVEL %	SAND %	FINES %	LL	PI
		A-2-4, Sa, brn, Moist, Rec. = 0.32m	5	29.3	0.2	82.9	16.9		
		A-2-4, Sa, gry, Moist, Rec. = 0.15m, Trace of Wood (tree root).	2	34.1	1.9	84.7	13.4		
		No Rec.	7						
		A-2-4, SiSa, brn, Moist, Rec. = 0.40m	2	25.5	0.1	69.6	30.3		
5		A-2-4, SiSa, gry, Moist, Rec. = 0.35m	5	21.6		65.8	34.2		
		A-3, Sa, gry, Moist, Rec. = 0.50m	8	21.3		92.9	7.1		
		A-2-4, SiSa, gry, Moist, Rec. = 0.42m	10	17.6	0.2	69.1	30.7		
		A-2-4, SiSa, gry, Moist, Rec. = 0.30m	31	18.8	0.2	74.5	25.3		
		A-4, SaSi, gry, WTW, Rec. = 0.45m	8	25.7		44.5	55.5		
10		A-4, Si, gry, WTW, Rec. = 0.45m	2	22.3		7.7	92.3		
		A-4, Si, gry, Wet, Rec. = 0.11m	6	27.9	1	3.9	95.1		
		A-4,SaSi, gry,Wet, Rec.=0.25m A-4, Si, gry, Wet, Rec.=0.35m	4	22.7 33.4		45.9 0.4	54.1 99.6	25	2
		A-4, ClSi, gry, Wet, Rec. = 0.60m	4	27.5		3.3	96.7	27	7
		A-4, Si, gry, Wet, Rec. = 0.25m	4	32.5		3.5	96.5		
15									

GEOLOGISTS REPORT: See next sheet.

STATE OF VERMONT
AGENCY OF TRANSPORTATION
MATERIALS & RESEARCH DIVISION
SUBSURFACE INFORMATION

HOLE NO.: B-6
SHEET 2 OF 2
DATE STARTED: 10/15/97
DATE COMPLETED: 10/20/97

PROJECT NAME: CORINTH
SITE NAME: BR* 34
STATION: 1+104.50
GROUND EL.: 235.299

PROJECT NUMBER: BRO 1447(22)
SITE NO.: TH *50
OFFSET: 5.00
G.W. DEPTH: 1.8

BORING CREW
CREW CHIEF: TALLMAN .
DRILLER: WILLIS
LOGGER: GAMMELL .
ADDITIONAL CREW:

BORING RIG: TRUCK
BORING TYPE: WASH BORE
SAMPLE TYPE: SPLIT BARREL

DEPTH	SYMBOL	CLASSIFICATION OF MATERIALS (Description)	BLOWS PER 0.3 m	M.C. %	GRAVEL %	SAND %	FINES %	LL	PI
		A-4, Si, gry, Wet, Rec. = 0.60m	5	27.3		11.6	88.4		
		A-4, Si, gry, Wet, Rec. = 0.30m	5	27.4		7.2	92.8		
		A-4, Si, gry, Wet, Rec. = 0.45m	25	17.3	12.3	13.8	73.9		
		A-2-4, GrSa, gry, Moist, Rec. = 0.30m	90	19	34.6	46.5	18.9		
		No Rec.	R						
20		BXMDC, 19.8m-20.0m, Boulders A-1-b, Sa HP, gry, Moist, Rec. = 0.15m	R	12.8	8.4	75	16.6		
		A-4, SaSi HP, gry, Moist, Rec. = 0.13m	R	17	1.1	27.8	71.1		
		A-4, SaSi HP, gry, Moist, Rec. = 0.21m	R	17.1	0.6	23	76.4		
		A-4, Si HP, gry, Moist, Rec. = 0.10m	R	13.4	15.5	12.1	72.4		
		Top of bedrock @ 23.1m							
		Run #1: BXMDC, 23.1m-24.6m, Rec. = 1.19m, See Geologist's Report.	1	79	0	5			
25		Run #2: BXMDC, 24.6m-26.1m, Rec. = 1.34m, See Geologist's Report.	2	89	0	5			
		Hole stopped @ 26.1m							

GEOLOGISTS REPORT:

Run #1: Gray schist with thin interbedded limestone. Hard to very hard.
Poor RQD due to mechanical breakage during drilling.

Run #2: (24.60m- 24.88m) Gray schist with thin interbedded limestone. Hard to very hard.

(24.88m-26.10m) Quartzite. Very hard. Unweathered.

Poor RQD due to mechanical breakage during drilling for all of Run #2.

VAOT Metric

PROJECT: CORINTH	PROJECT NO.: STP BRO 1447(22) (RE-ADVERTISED)
DESIGN FILE NO: /matres/93j042/mj042bor.dgn IPARM FILE NAME:	PLOT DATE: 16-JUL-2008
DRAWN BY: J. TOUCHETTE	SQUAD LEADER: C.C. BENDA
BORING LOGS	SHEET: 16 OF 42

Metric

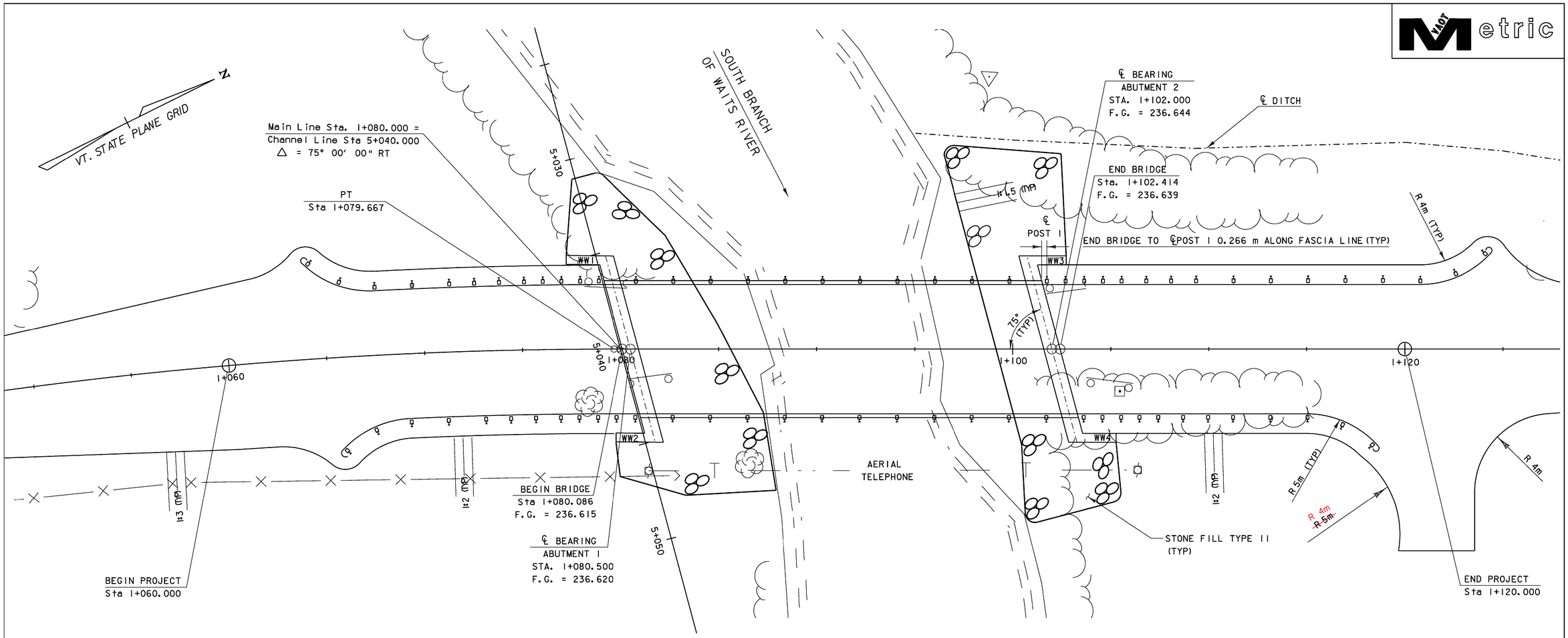

PLAN

0 2 4 6 8 10
SCALE 1:100

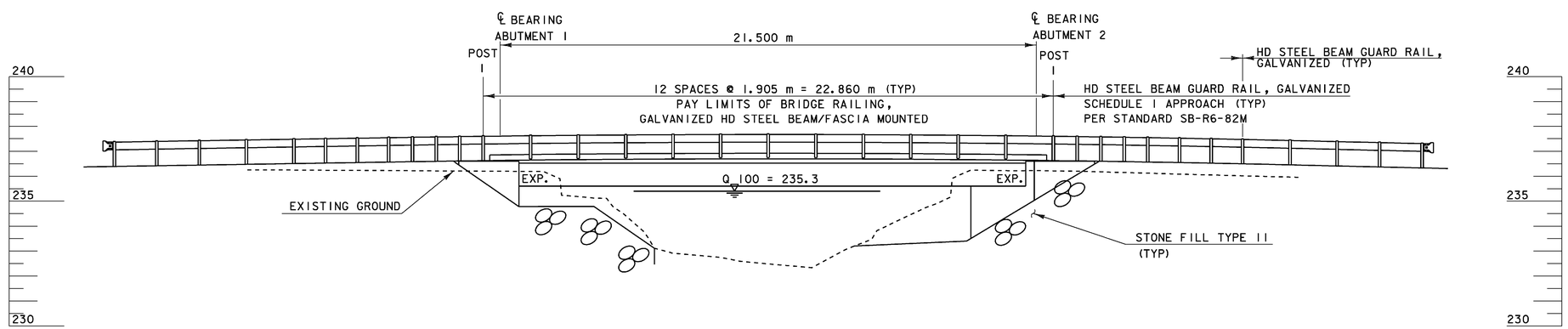

ELEVATION

0 2 4 6 8 10
SCALE 1:100

DATUM	
VERTICAL	NAVD 88
HORIZONTAL	NAD 83/92

PROJECT: CORINTH	PROJECT NO.: STP BRO 1447 (22) (RE-ADVERTISED)
DESIGN FILE NAME: /str4/93J042/sJ042pe.dgn	
IPARM FILE NAME: sJ042pe.i	PLOT DATE: 16-JUL-2008
SURVEYED BY: R.D. GILMAN	SURVEY DATE: 3/15/95
SQUAD LEADER: C.P. WILLIAMS	DRAWN BY: P.G. JARVIS
PLAN AND ELEVATION	SHEET: 17 OF 42

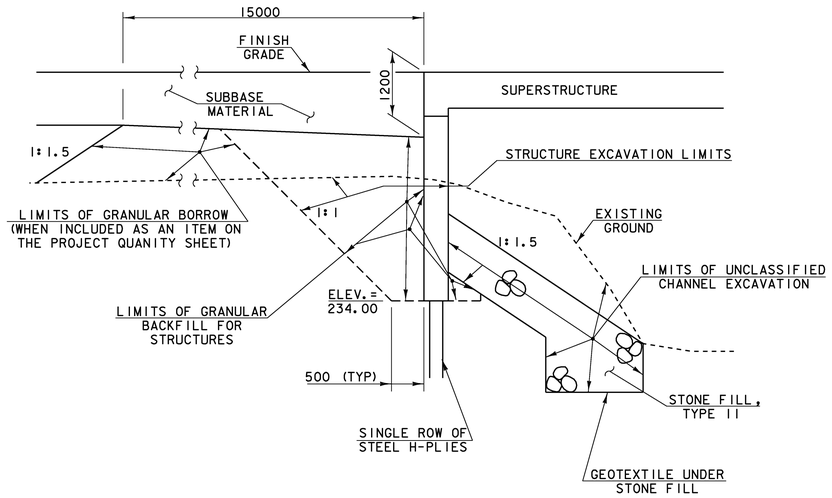

TYPICAL INTEGRAL ABUTMENT SECTION

NTS

1. ACTUAL EXCAVATION LIMITS SHALL BE DETERMINED BY THE CONTRACTOR. HOWEVER, ONLY THE EXCAVATION BETWEEN THE LIMITS SHOWN WILL BE PAID FOR UNDER THE ITEM 204.25 "STRUCTURE EXCAVATION".

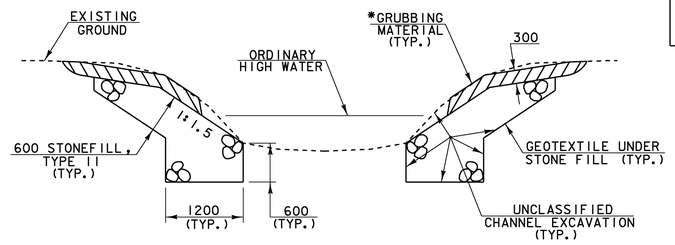

TYPICAL CHANNEL SECTION

NTS

* GRUBBING MATERIAL SHALL NOT BE PLACED ON THE STONE FILL IN THE AREA UNDER THE BRIDGE. WHENEVER CHANNEL SLOPE INTERSECTS ROADWAY SUBBASE, GRUBBING MATERIAL SHALL BEGIN AT THE BOTTOM OF SUBBASE.

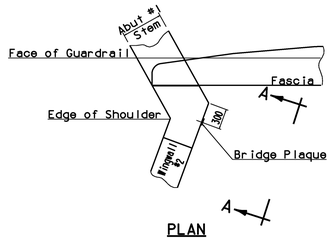

PLAN

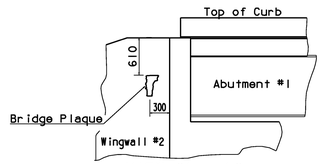

VIEW "A - A"

LOCATE BRIDGE PLAQUE

The bench mark and bridge plaque will be supplied by The Agency of Transportation and shall be installed by the contractor at abutment #1 on the right side as shown or as directed by the engineer.

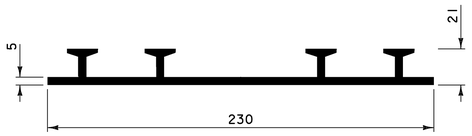

P.V.C. WATERSTOP FOR CONSTRUCTION JOINTS

Other configurations may be used upon approval of the structures engineer.

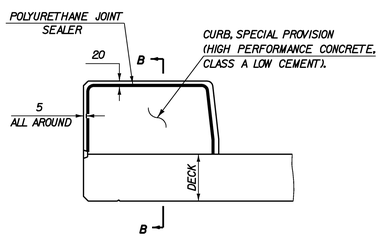

TYPICAL SECTION THROUGH CONCRETE CURB CONSTRUCTION JOINT

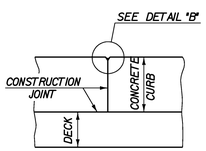

SECTION B - B

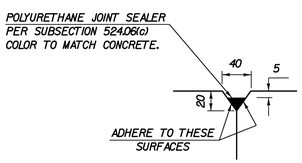

DETAIL 'B'

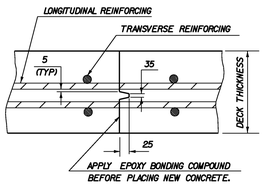

TRANSVERSE BRIDGE SLAB CONSTRUCTION JOINT DETAILS

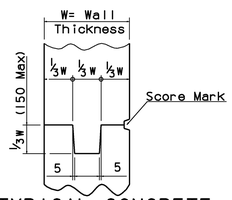

TYPICAL CONCRETE CONSTRUCTION JOINT

NOTES:

1. Concrete curbs may be placed in one pour for the full length of the bridge. If the contractor elects to use curb construction joints, they shall be constructed as shown in these details and notes 2 and 3 shall apply.
2. Construction joints shall be 460 mm minimum from the center of the nearest bridge rail post. Concrete shall be placed in alternating sections with a minimum of 48 hours delay between adjancent pours.
3. Longitudinal reinforcing shall pass through concrete curb construction joints.
4. The costs for P.V.C. Waterstop for Construction Joints, Transverse Bridge Slab Construction Joint, Bridge Plaque, and Polyurethane Joint Sealer shall be included in the unit price bid for Item 501.34, Concrete, High Performance Class B.

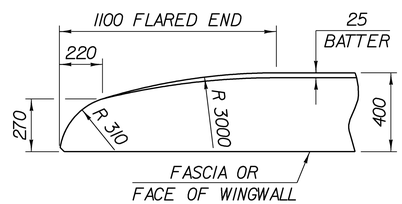

FLARED END FOR 400 CURB

BARS SHALL BE TURNED AS REQUIRED TO FIT FLARED ENDS

PROJECT: CORINTH	PROJECT NO.: STP BRO 1447 (22) (RE-ADVERTISED)
DESIGN FILE NAME: sj042.dtl.dgn	
IPARM FILE NAME: sj042misc.i	PLOT DATE: 16-JUL-2008
DESIGNED BY: H. I. SALLS	DRAWN BY: H. I. SALLS
SQUAD LEADER: C.P. WILLIAMS	CHECKED BY: R.S. YOUNG
MISCELLANEOUS DETAILS	SHEET: 18 OF 42

GENERAL NOTES

1. ALL MATERIALS AND CONSTRUCTION SHALL CONFORM TO STATE OF VERMONT, AGENCY OF TRANSPORTATION, STANDARD SPECIFICATIONS FOR CONSTRUCTION, DATED 2006, AND ITS LATEST REVISIONS. THE SUPERSTRUCTURE SHALL CONFORM TO AASHTO LRFD BRIDGE CONSTRUCTION SPECIFICATIONS, DATED 1998, AND ITS LATEST REVISIONS. THE SUBSTRUCTURE SHALL CONFORM TO AASHTO STANDARD SPECIFICATIONS FOR HIGHWAY BRIDGES, DATED 2001, AND ITS LATEST REVISIONS.

2. DESIGN IS FOR HL-93 LIVE LOADING.

3. ALL DIMENSIONS ARE HORIZONTAL OR VERTICAL AND ARE GIVEN AT 20 DEGREES CELSIUS OR AS NOTED OTHERWISE.

4. TH 50 WILL REMAIN CLOSED TO THRU TRAFFIC DURING CONSTRUCTION. THE CONTRACTOR SHALL NOTIFY THE TOWN OF CORINTH IN WRITING TWO WEEKS PRIOR TO CLOSING. ACCESS TO RESIDENCES SHALL BE BY DETOUR ALONG TH 50 AND TH 40. SEE TEMPORARY DETOUR SHEET (SHEET 10).

5. ITEM 641.10 "TRAFFIC CONTROL" WILL BE USED TO PAY FOR THE DETOUR SIGNING AS DETAILED ON THESE PLANS.

6. THE STONEFILL TYPE II UNDER THE BRIDGE SHALL BE PLACED BEFORE THE BEAMS ARE SET.

7. THE FENCE TO BE REMOVED AND RESET BETWEEN STATIONS 1+040 RIGHT AND 1+084 RIGHT SHALL BE RESET ALONG THE NEW RIGHT-OF-WAY LINE. REFER TO THE PROJECT SPECIAL PROVISIONS FOR APPLICABLE SPECIAL AGREEMENTS.

8. AFTER THE SUPERSTRUCTURE STEEL HAS BEEN SET ON THE ANCHOR BOLTS, ELEVATIONS SHALL BE TAKEN ALONG THE TOP OF EACH BEAM UNDER THE DIRECTION OF THE RESIDENT ENGINEER. THESE ELEVATIONS SHALL BE USED IN DETERMINING THE FINAL GRADE.

9. ALL FIELD CONNECTIONS SHALL BE MADE USING M22 X 2.5 TYPE 3 BOLTS MEETING THE AASHTO M 164M REQUIREMENTS. ANY CONNECTIONS NOT DESIGNATED SHALL BE DETAILED BY THE FABRICATOR AND SUBMITTED TO THE STRUCTURES ENGINEER FOR APPROVAL. HOLE DIAMETER SHALL BE 24 MILLIMETERS.

10. FLEMING BRACKETS SHALL BE DESIGNED BY THE CONTRACTOR, BUT SHALL BE LIMITED TO A MAXIMUM SPACING OF 1200 MILLIMETERS.

11. ANY HOLES IN THE FASCIA BEAMS NOT OTHERWISE FILLED SHALL BE FILLED WITH BOLTS CONFORMING TO AASHTO M 164M TYPE 3.

12. REINFORCING STEEL PLACEMENT TOLERANCES SHALL BE AS FOLLOWS:

SPACING	+/- 25 MILLIMETERS
CLEARANCE	+/- 6 MILLIMETERS

13. THE KEY IN CONCRETE CONSTRUCTION JOINTS SHALL BE MONOLITHIC AND CONTINUOUS FOR THE FULL LENGTH OF THE JOINT. UPWARD KEYS SHALL BE PLACED INTEGRALLY WITH THE CONCRETE BELOW THE JOINT.

14. JOINTS AND SCORE MARKS IN THE CONCRETE SHALL BE CONSTRUCTED AS INDICATED ON THE PLANS OR AS DIRECTED BY THE ENGINEER.

15. ALL EXPOSED EDGES OF CONCRETE SHALL BE CHAMFERED 25 X 25.

16. WATER REPELLENT SILANE SHALL BE APPLIED TO ALL EXPOSED CONCRETE SURFACES, EXCEPT THE UNDERSIDE OF THE BRIDGE DECK BETWEEN DRIP NOTCHES.

17. THE DECK POUR IS TO BE PLACED IN ONE CONTINUOUS PLACEMENT WITH A MAXIMUM DURATION OF EIGHT HOURS. IF CIRCUMSTANCES BEYOND THE CONTRACTOR'S CONTROL PREVENT THIS FROM BEING ACCOMPLISHED, A TRANSVERSE CONSTRUCTION JOINT SHALL BE USED. A 96 HOUR DELAY BETWEEN THE COMPLETION OF ONE DAY'S PLACEMENT AND THE BEGINNING OF ANOTHER PLACEMENT SHALL BE OBSERVED.

18. THE DECK SHALL BE GIVEN A TURF DRAG FINISH. SEE SPECIAL PROVISIONS.

19. ALL CONCRETE ABOVE ABUTMENT CONSTRUCTION JOINT ELEVATION, INCLUDING THE DECK AND CURB SHALL BE SPECIAL PROVISION (HIGH PERFORMANCE CONCRETE, CLASS A LOW CEMENT). ALL OTHER SUBSTRUCTURE CONCRETE SHALL BE CONCRETE, HIGH PERFORMANCE CLASS B, UNLESS NOTED OTHERWISE.

20. ALL REINFORCING STEEL SHALL BE EPOXY COATED AND PAID FOR UNDER THE ITEM 507.17 "EPOXY COATED REINFORCING STEEL".

21. THE PILES SHALL BE HP 310 X 93.

22. THE PILES WILL REQUIRE PILE SHOES. THE SHOES SHALL BE CAST STEEL AND SHALL CONFORM TO SECTION 505.

23. THE PILES SHALL BE DRIVEN TO LEDGE WITH AN ULTIMATE CAPACITY OF 2300 KILONEWTONS AS DETERMINED BY THE RESIDENT ENGINEER.

24. TO ENSURE THAT THE ULTIMATE AXIAL CAPACITY HAS BEEN ATTAINED AND TO PREVENT THE OVERSTRESSING OF THE PILES DURING DRIVING OPERATIONS, DYNAMIC MONITORING SHALL BE PERFORMED FOR THE FIRST PILE DRIVEN AT EACH ABUTMENT. THIS WORK SHALL BE PERFORMED IN ACCORDANCE WITH SUBSECTION 505.04(C)(2). PAYMENT FOR PILE TESTING SHALL BE MADE UNDER ITEM 505.45, "DYNAMIC PILE LOADING TEST". ADDITIONAL TESTS MAY BE REQUIRED BY THE RESIDENT ENGINEER.

25. NOT USED

26. THE EXISTING STEEL TRUSS SHALL BE REMOVED USING ITEM 900.645 SPECIAL PROVISION (STEEL BRIDGE TRUSS REMOVAL AND DELIVERY). SEE SPECIAL PROVISIONS FOR DETAILS.

27. ITEM 529.15 "REMOVAL OF STRUCTURE" SHALL BE USED FOR REMOVAL OF ALL OF THE SUPERSTRUCTURE NOT REMOVED UNDER ITEM 900.645 SPECIAL PROVISION (STEEL BRIDGE TRUSS REMOVAL AND DELIVERY) AND FOR ANY PORTION OF THE ABUTMENTS OUTSIDE THE LIMITS OF "STRUCTURE EXCAVATION" OR "UNCLASSIFIED CHANNEL EXCAVATION". THE BID PRICE FOR CONTRACT ITEM 529.15 SHALL INCLUDE ANY NECESSARY BACKFILL BELOW THE LIMITS SHOWN FOR "STRUCTURE EXCAVATION" OR "UNCLASSIFIED CHANNEL EXCAVATION".

28. THE EXISTING STEEL BEAMS AND H-PILES USED AS TEMPORARY SHORING SHALL REMAIN THE PROPERTY OF THE TOWN OF CORINTH. THE CONTRACTOR SHALL DELIVER THESE BEAMS, AND UNLOAD THEM, AT A LOCATION SPECIFIED BY THE TOWN WITHIN 10 MILES OF THE PROJECT. PAYMENT FOR THIS WORK SHALL BE INCLUDED UNDER THE ITEM 529.15 "REMOVAL OF STRUCTURE". CONTACT ROAD FOREMAN JOE BLODGETT AT 439-6272 FOR DETAILS.

29. EXCEPT AS NOTED ABOVE, THE EXISTING STRUCTURAL STEEL IS PAINTED WITH A MATERIAL THAT MAY CONTAIN LEAD. THE CONTRACTOR SHALL FOLLOW ALL APPLICABLE REGULATIONS WHEN HANDLING AND WORKING WITH THIS STEEL. EXISTING STRUCTURAL STEEL REMOVED AND NOT RETAINED BY THE STATE IS THE PROPERTY OF THE CONTRACTOR. THE CONTRACTOR SHALL INDEMNIFY AND HOLD THE STATE, ITS OFFICERS, AND EMPLOYEES HARMLESS CONCERNING THE CONTRACTOR'S USE OR DISPOSITION OF THE REMOVED EXISTING STRUCTURAL STEEL.

30. THE EXISTING SIGNS NOT REUSED SHALL REMAIN THE PROPERTY OF THE TOWN OF CORINTH AND SHALL BE STOCKPILED ON SITE. THE TOWN ROAD FOREMAN, JOE BLODGETT, SHALL BE NOTIFIED TO PICK UP THE SIGNS AT 439-6272.

31. THE TELEPHONE JUNCTION BOX AT STATION 1+105.3 RIGHT SHALL BE MOVED BY OTHERS. SEE SPECIAL PROVISIONS.

Metric

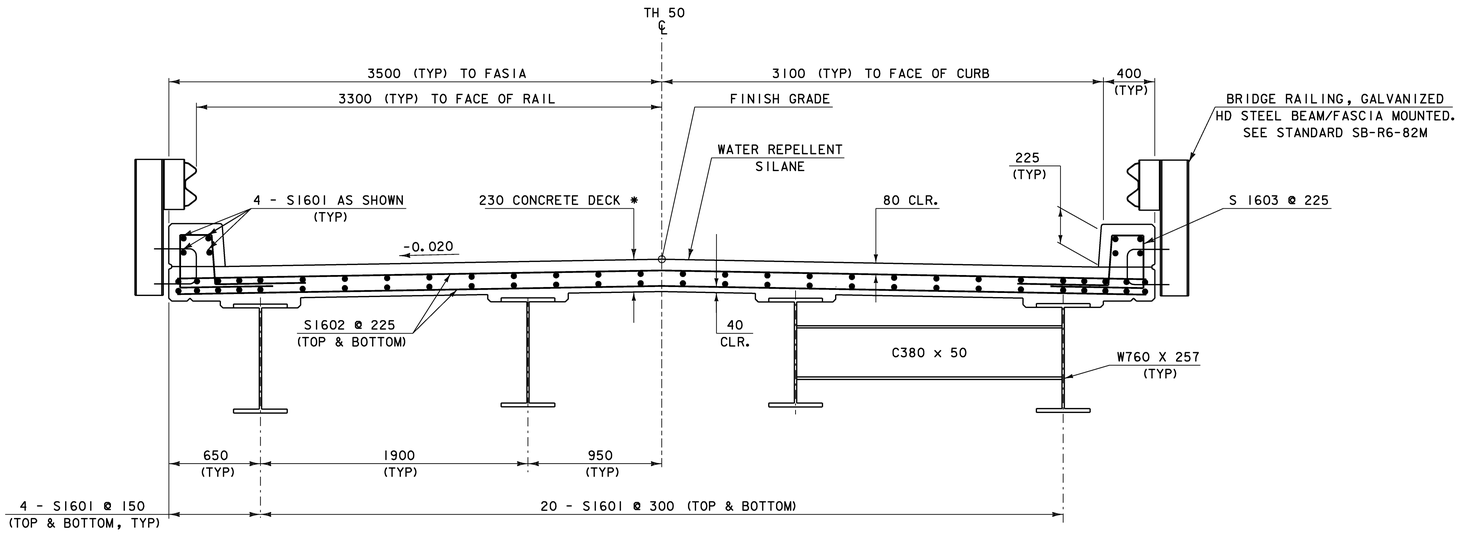

TYPICAL STEEL BEAM BRIDGE SECTION
(SCALE 1 : 20)

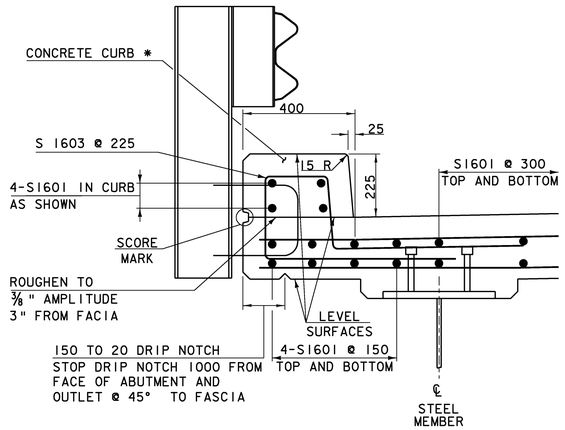

TYPICAL 400 CURB SECTION
(SCALE 1:10)

* CONCRETE SHALL BE SPECIAL PROVISION
(HIGH PERFORMANCE CONCRETE, CLASS A LOW CEMENT)

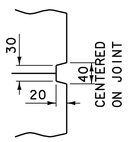

SCORE MARK DETAIL
NTS

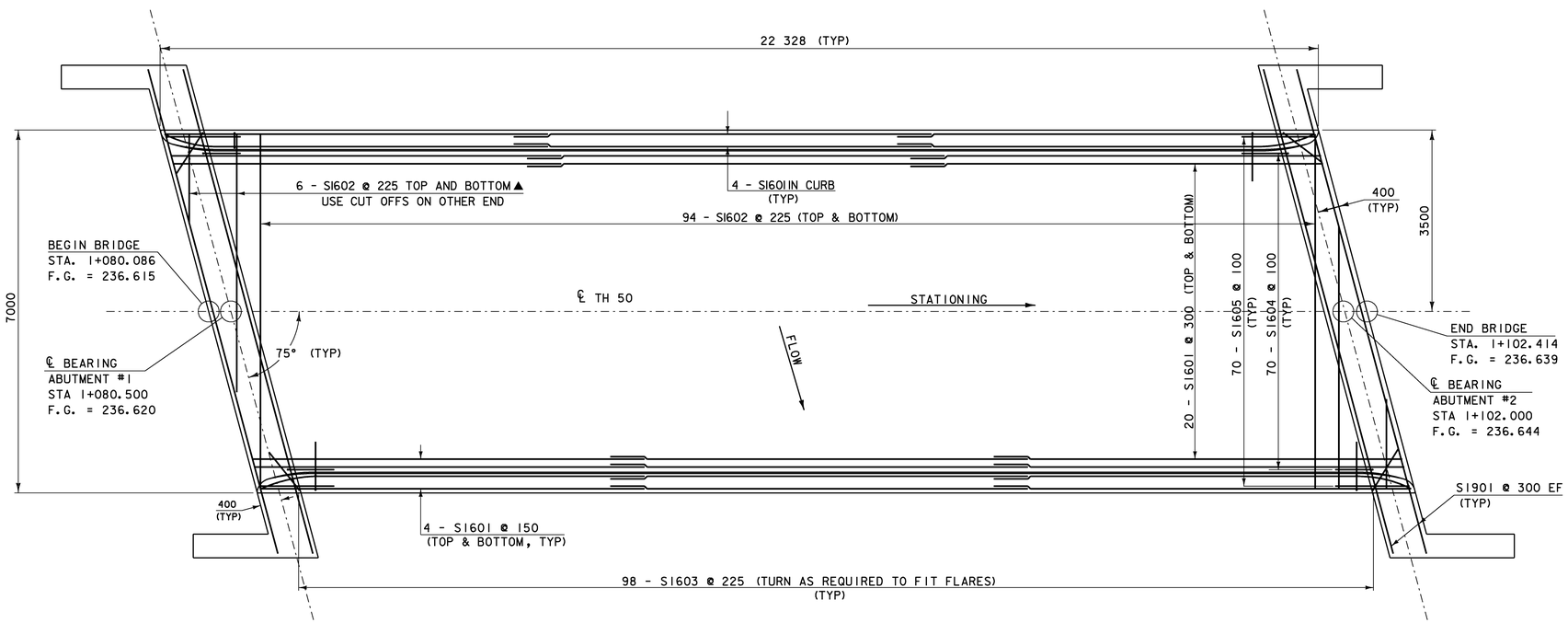

DECK REINFORCING PLAN
SCALE: 1 : 50

NOTE: SEE SHEET 24 FOR STEM STEEL REINFORCEMENT

NOTE:

NF = NEAR FACE
FF = FAR FACE
EF = EACH FACE
▲ = CUT TO FIT IN FIELD
80 CLR. UNLESS OTHERWISE SPECIFIED ON THE PLANS.
ALL LAPS SHALL BE 660 UNLESS NOTED OTHERWISE
ALL REINFORCING STEEL SHALL BE EPOXY COATED.

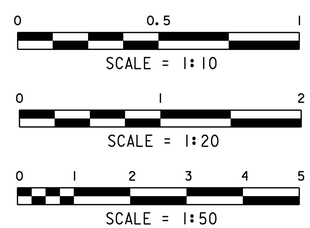

PROJECT: CORINTH	PROJECT NO.: STP BRO 1447 (22) (RE-ADVERTISED)
DESIGN FILE NAME: sj042sup.dgn IPARM FILE NAME: sj042deckdt1.i DESIGNED BY: H.I. SALLS SQUAD LEADER: C.P. WILLIAMS DECK STRUCTURAL DETAILS	PLOT DATE: 16-JUL-2008 DRAWN BY: H.I. SALLS CHECKED BY: R.S. YOUNG SHEET: 20 OF 42

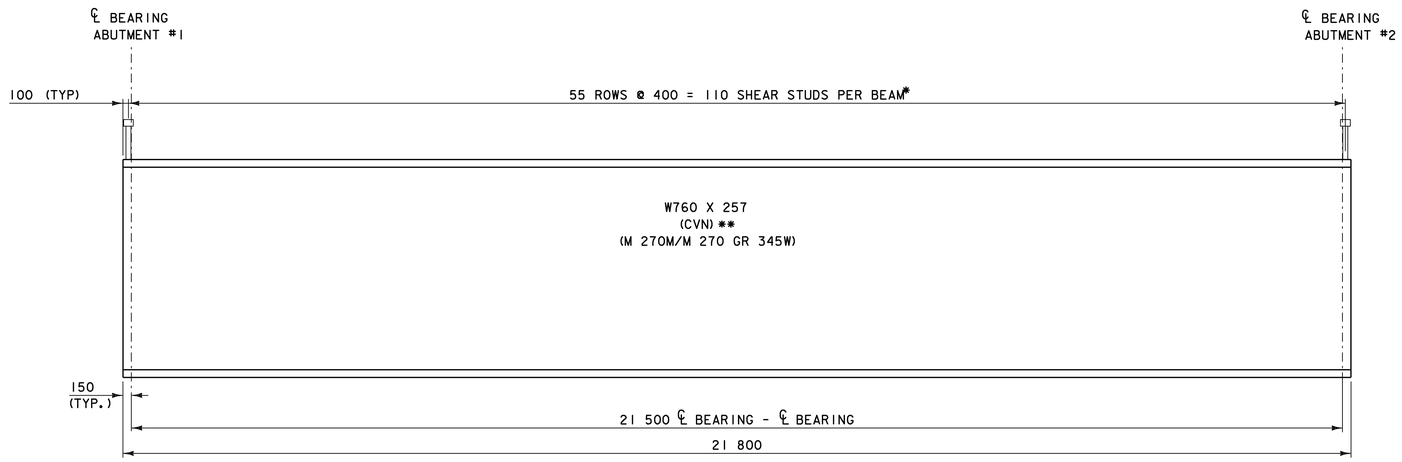

NOTE:
HOLES FOR TRANSVERSE
REINFORCING STEEL NOT SHOWN.

BEAM ELEVATION

HORIZONTAL SCALE: 1 : 50
VERTICAL SCALE : 1 : 10

* SEE HAUNCH AND SHEAR CONNECTOR DETAIL SHEET 22
** DENOTES THAT CHARPY V-NOTCH TESTING MUST BE DONE

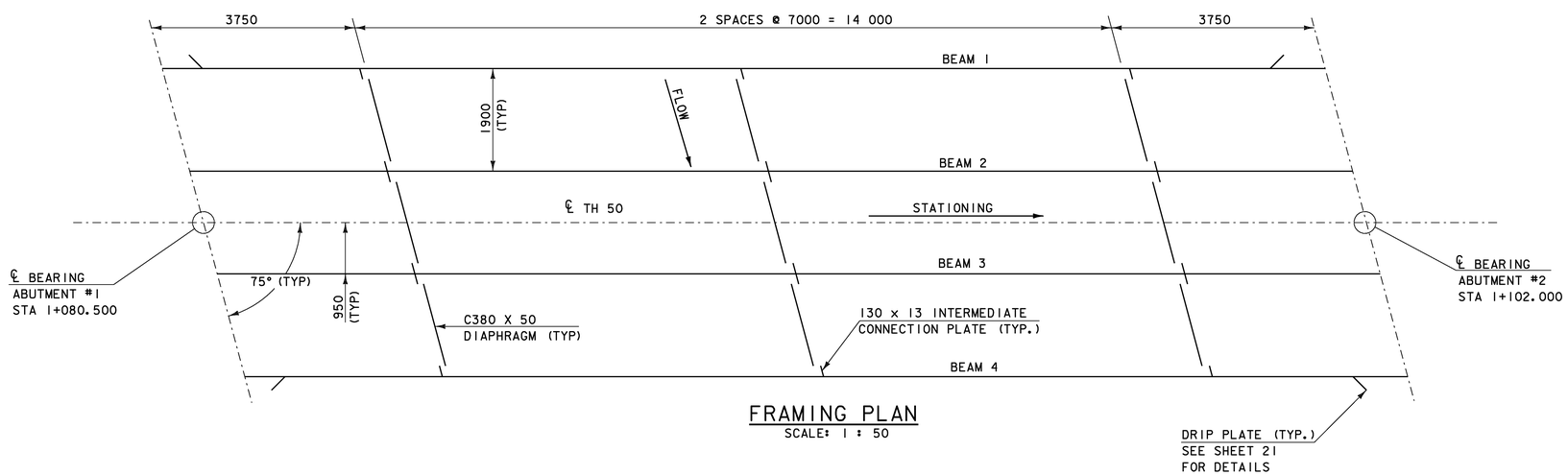

FRAMING PLAN

SCALE: 1 : 50

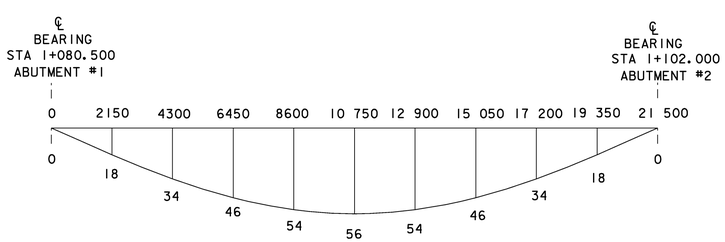

DEAD LOAD DEFLECTION DIAGRAM

NOT TO SCALE

NOTE: DEAD LOAD DEFLECTION DIAGRAM INCLUDES 11 mm DEAD LOAD DEFLECTION @ MIDSPAN DUE TO BEAM SELFWEIGHT.

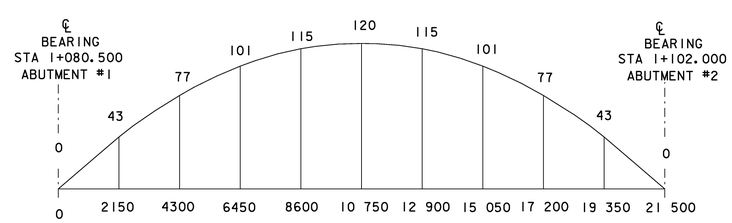

CAMBER DIAGRAM

NOT TO SCALE

NOTE: CAMBER DIAGRAM INCLUDES 11 mm DEAD LOAD DEFLECTION @ MIDSPAN DUE TO BEAM SELFWEIGHT. TOTAL CAMBER @ MIDSPAN MEASURED WHEN BEAM IS SUPPORTED ONLY AT ℄ BEARING POINTS SHALL BE 109 mm.

0 1 2 3 4 5
SCALE = 1:50

PROJECT: CORINTH	PROJECT NO.: STP BRO 1447 (22) (RE-ADVERTISED)
DESIGN FILE NAME: sj042sup.dgn IPARM FILE NAME: sj042frm.i DESIGNED BY: H.I. SALLS SQUAD LEADER: C.P. WILLIAMS FRAMIMG PLAN	PLOT DATE: 16-JUL-2008 DRAWN BY: H.I. SALLS CHECKED BY: R.S. YOUNG SHEET: 21 OF 42

Metric

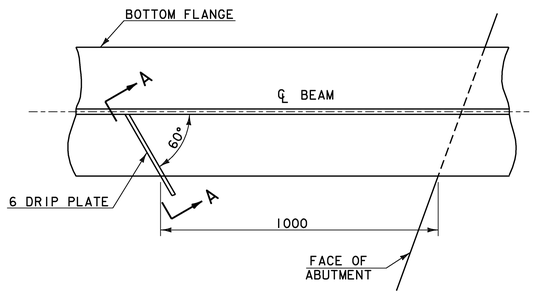

PLAN DRIP PLATE

NTS

NOTE:
DRIP PLATES SHALL BE PLACED ON OUTSIDE EDGE OF FASCIA GIRDERS ON THE HIGH SIDE OF ALL PIERS AND ABUTMENTS OR AS INDICATED ON PROJECT PLANS.

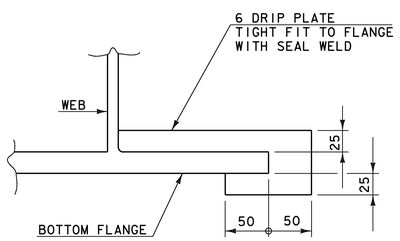

SECTION A - A

NTS

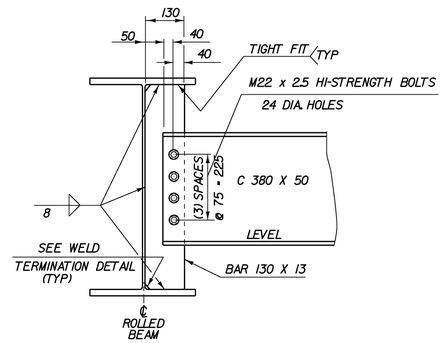

NOTE: HI-STRENGTH BOLTS, NUTS AND WASHERS SHALL CONFORM TO AASHTO DESIGNATION M164M.

INTERMEDIATE DIAPHRAGMS

NTS

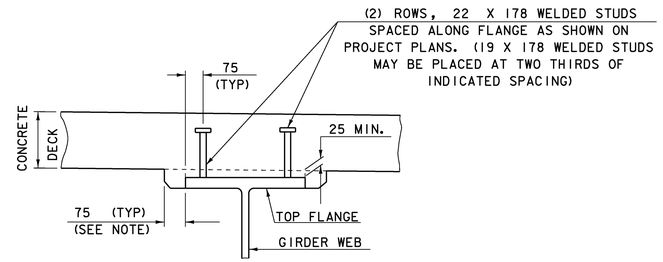

NOTE: THE 75 HORIZONTAL SECTION MAY BE ELIMINATED FOR FORMING SYSTEMS DESIGNED FOR THE CONSTRUCTION OF VERTICAL HAUNCHES. SYSTEMS SHALL BE SUBMITTED FOR APPROVAL TO THE STRUCTURES ENGINEER. ALL VOIDS SHALL BE FILLED WITH MORTAR, TYPE IV OR AN EQUIVALENT PRODUCT FROM THE APPROVED PRODUCTS LIST.

HAUNCH AND SHEAR CONNECTOR DETAILS

NTS

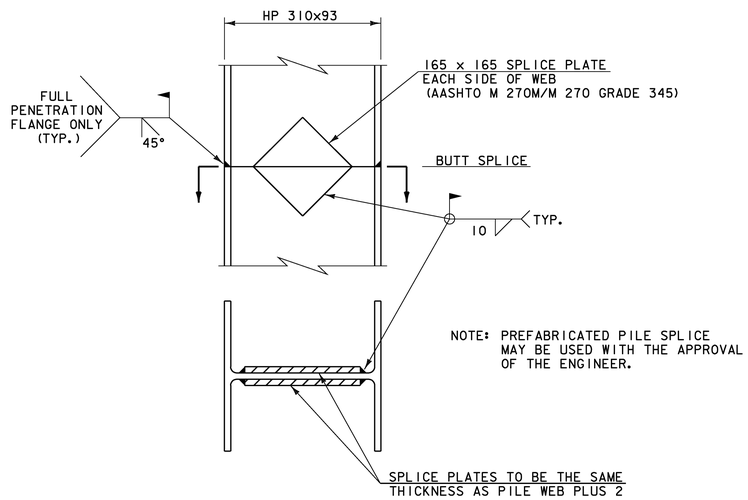

NOTE: PREFABRICATED PILE SPLICE MAY BE USED WITH THE APPROVAL OF THE ENGINEER.

DETAIL OF PILE SPLICE

NTS

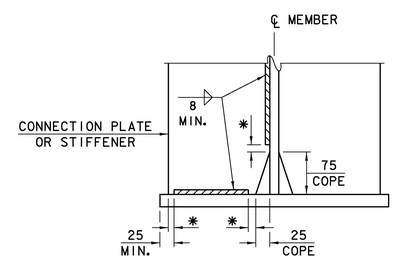

WELD TERMINATION AND COPING DETAIL FOR STEEL MEMBERS

* NO WELD FOR 10 MIN., 22 MAX. (EXCEPT MUST MAINTAIN 25 MIN. FROM EDGE OF FLANGE)

PROJECT: CORINTH	PROJECT NO.: STP BRO 1447 (22) (RE-ADVERTISED)
DESIGN FILE NAME: sj042.dtl.dgn	
IPARM FILE NAME: sj042ssd.i	PLOT DATE: 16-JUL-2008
DESIGNED BY: H. I. SALLS	DRAWN BY: H. I. SALLS
SQUAD LEADER: C.P. WILLIAMS	CHECKED BY: R.S. YOUNG
STRUCTURAL STEEL DETAILS	SHEET: 22 OF 42

Metric

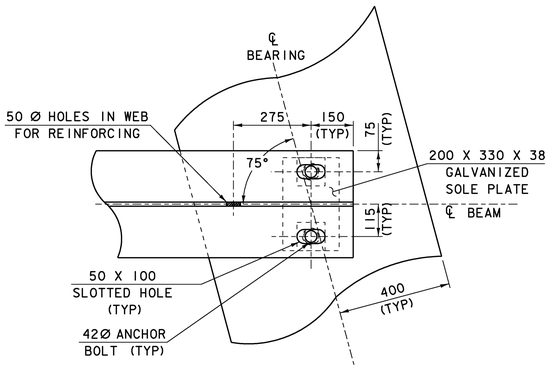

PLAN VIEW END OF STEEL BEAM AT ABUTMENT

SCALE = 1:10

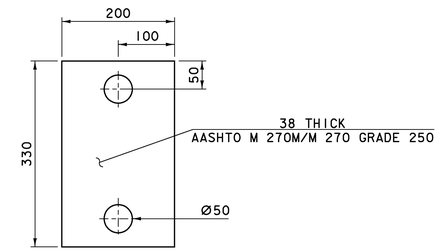

SOLE PLATE DETAIL

SCALE = 1:5

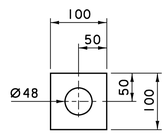

PLATE WASHER DETAIL

SCALE = 1:5

NOTES

1. THE SOLE PLATES, ANCHOR BOLTS, WASHERS AND NUTS SHALL BE PAID FOR UNDER ITEM 531.14, "BEARING DEVICE ASSEMBLY, INTEGRAL ABUTMENT" AND SHALL CONFORM TO SECTION 531 OF THE STANDARD SPECIFICATIONS.

2. THE SOLE PLATES, ANCHOR BOLTS, AND WASHERS SHALL BE GALVANIZED OR METALIZED AS PER SUBSECTIONS 531.04 AND 506.15 OF THE STANDARD SPECIFICATIONS.

3. ANCHOR BOLTS SHALL BE M42 X 4.5, CLASS 8.8 BOLTS MEETING ASTM F 568M. NUTS SHALL MEET AASHTO M291M. THE CONTRACTOR SHALL ENSURE THAT THE ANCHOR BOLTS ARE INSTALLED IN A PLUMB POSITION. ONE EXTRA ANCHOR BOLT SHALL BE SUPPLIED FOR TESTING PURPOSES.

4. ALL STEEL IN BEARING DEVICE ASSEMBLY SHALL BE AASHTO M 270M/M 270 GR 250 UNLESS OTHERWISE NOTED.

5. SUBSTITUTIONS FOR BEARING DEVICE ASSEMBLY COMPONENT MATERIALS AND SIZES SHALL BE DETAILED ON THE SHOP DRAWINGS. ALL SUBSTITUTIONS SHALL BE APPROVED BY THE STRUCTURES ENGINEER PRIOR TO FABRICATION AS PER SUBSECTION 506.04 OF THE STANDARD SPECIFICATIONS.

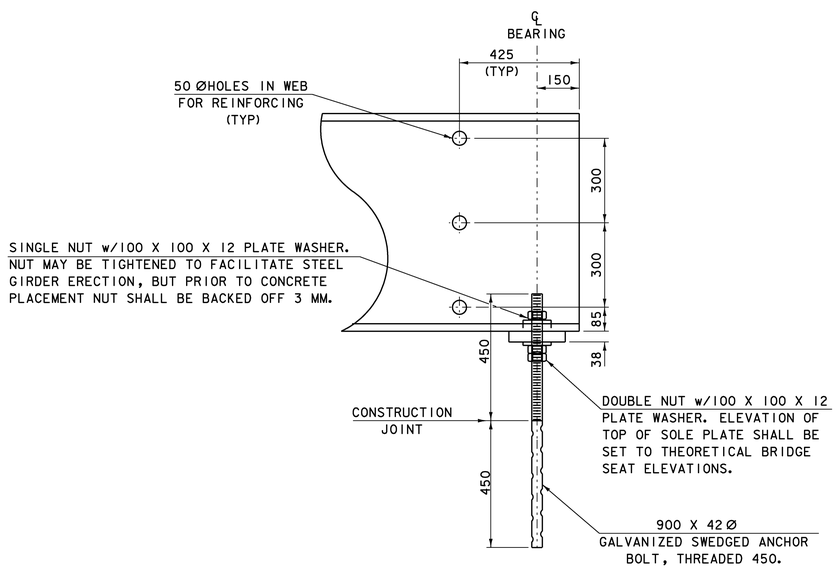

ELEVATION VIEW END OF STEEL BEAM AT ABUTMENT

SCALE: 1 : 10

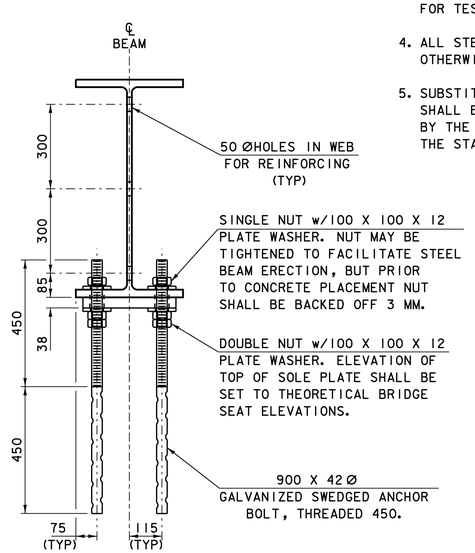

END ELEVATION VIEW OF STEEL BEAM AT ABUTMENT

SCALE: 1 : 10

THEORETICAL BRIDGE SEAT ELEVATIONS		
	ABUTMENT #1	ABUTMENT #2
BEAM #1	235.502	235.544
BEAM #2	235.547	235.576
BEAM #3	235.554	235.571
BEAM #4	235.522	235.527

NOTE:

NF = NEAR FACE
FF = FAR FACE
EF = EACH FACE
▲ = CUT TO FIT IN FIELD
80 CLR. UNLESS OTHERWISE SPECIFIED ON THE PLANS.
ALL LAPS SHALL BE 660 UNLESS NOTED OTHERWISE
ALL REINFORCING STEEL SHALL BE EPOXY COATED.

0 0.25 0.5
SCALE = 1:5

0 0.5 1
SCALE = 1:10

PROJECT: CORINTH	PROJECT NO.: STP BRO 1447 (22) (RE-ADVERTISED)
DESIGN FILE NAME: sj042sub.dgn	
IPARM FILE NAME: sj042abtdtl.i	PLOT DATE: 16-JUL-2008
DESIGNED BY: H. I. SALLS	DRAWN BY: H. I. SALLS
SQUAD LEADER: C.P. WILLIAMS	CHECKED BY: R.S. YOUNG
BEARING DETAIL SHEET	SHEET: 23 OF 42

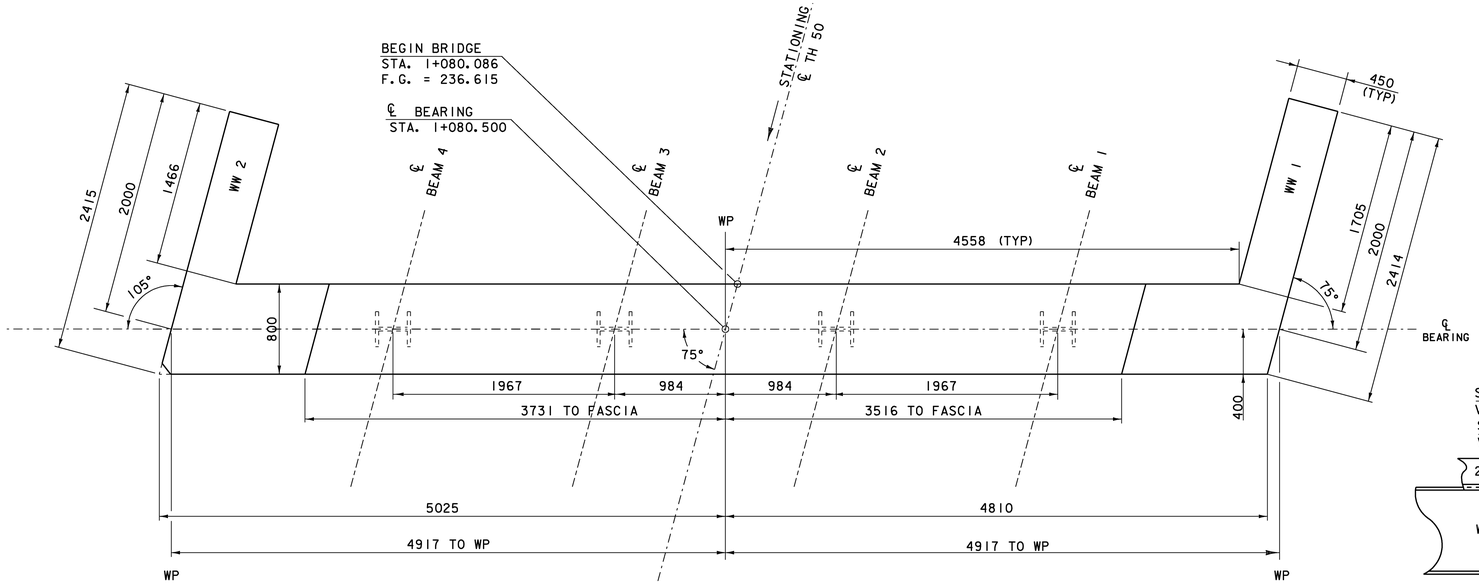

ABUTMENT #1 PLAN
(SCALE 1 : 25)

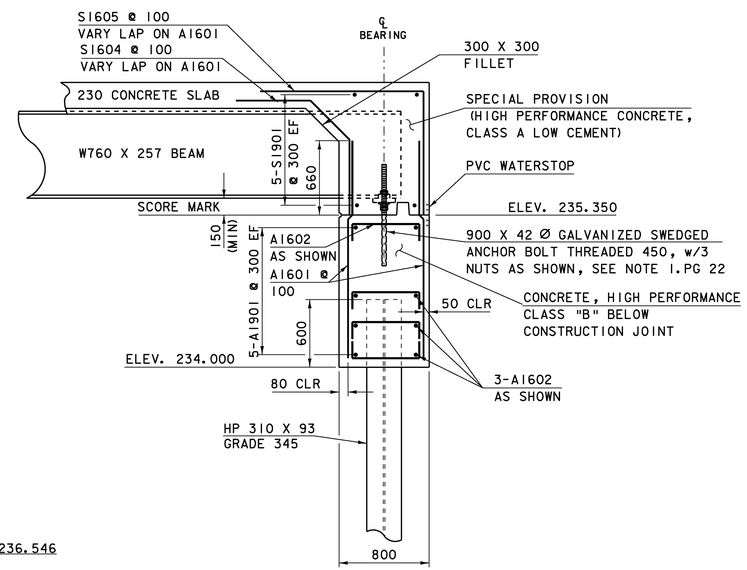

BRIDGE END DETAIL & ABUTMENT TYPICAL SECTION
SCALE: 1 : 25

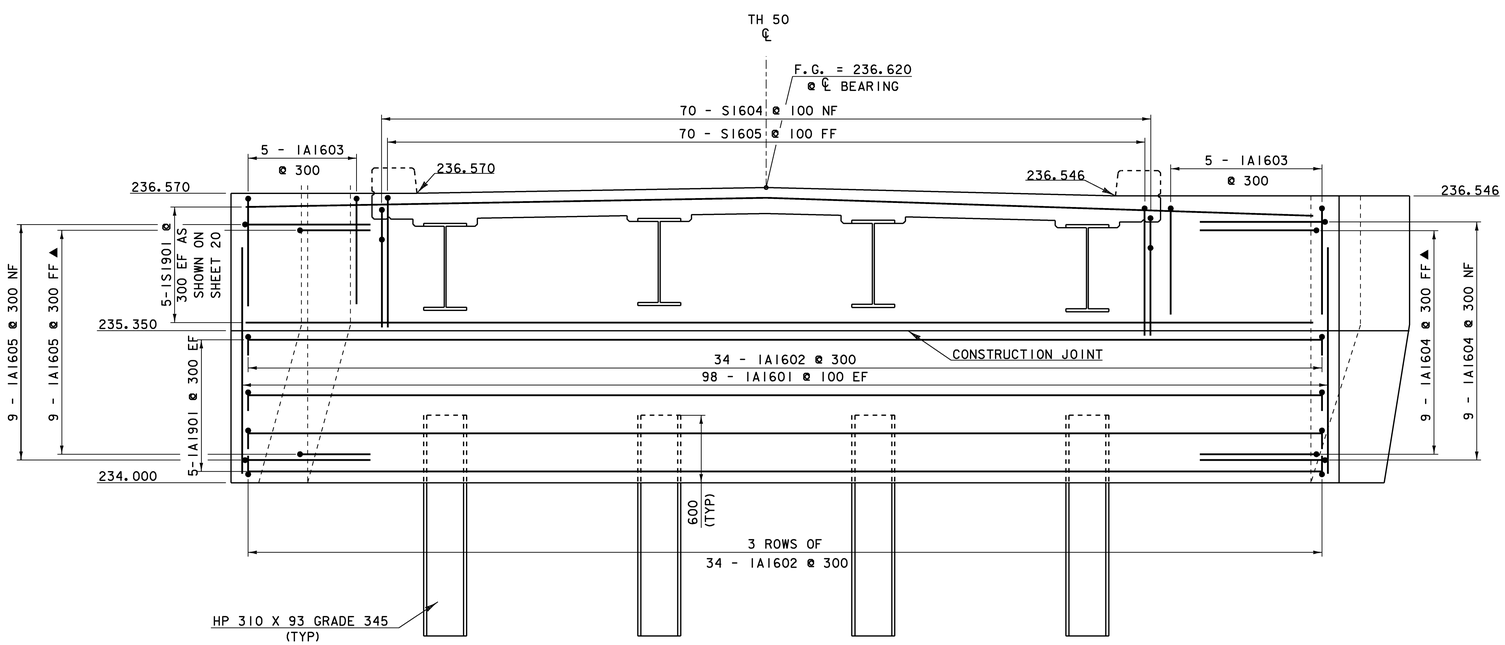

ABUTMENT #1 ELEVATION
(SCALE 1 : 25)

NOTE: ALL PILES SHALL BE CENTERED ALONG THE CENTERLINE OF BEARING WITH THE PILE WEB PARALLEL TO THE FACE OF THE ABUTMENT.

NOTE:

NF = NEAR FACE
FF = FAR FACE
EF = EACH FACE
▲ = CUT TO FIT IN FIELD
80 CLR. UNLESS OTHERWISE SPECIFIED ON THE PLANS.
ALL LAPS SHALL BE 660 UNLESS NOTED OTHERWISE
ALL REINFORCING STEEL SHALL BE EPOXY COATED.

0 1 2
SCALE = 1:25

PROJECT: CORINTH	PROJECT NO.: STP BRO 1447 (22) (RE-ADVERTISED)
DESIGN FILE NAME: sj042sub.dgn IPARM FILE NAME: sj042a1.i DESIGNED BY: H. I. SALLS SQUAD LEADER: C.P. WILLIAMS ABUTMENT #1 PLAN & ELEVATION	PLOT DATE: 16-JUL-2008 DRAWN BY: H. I. SALLS CHECKED BY: R.S. YOUNG SHEET: 24 OF 42

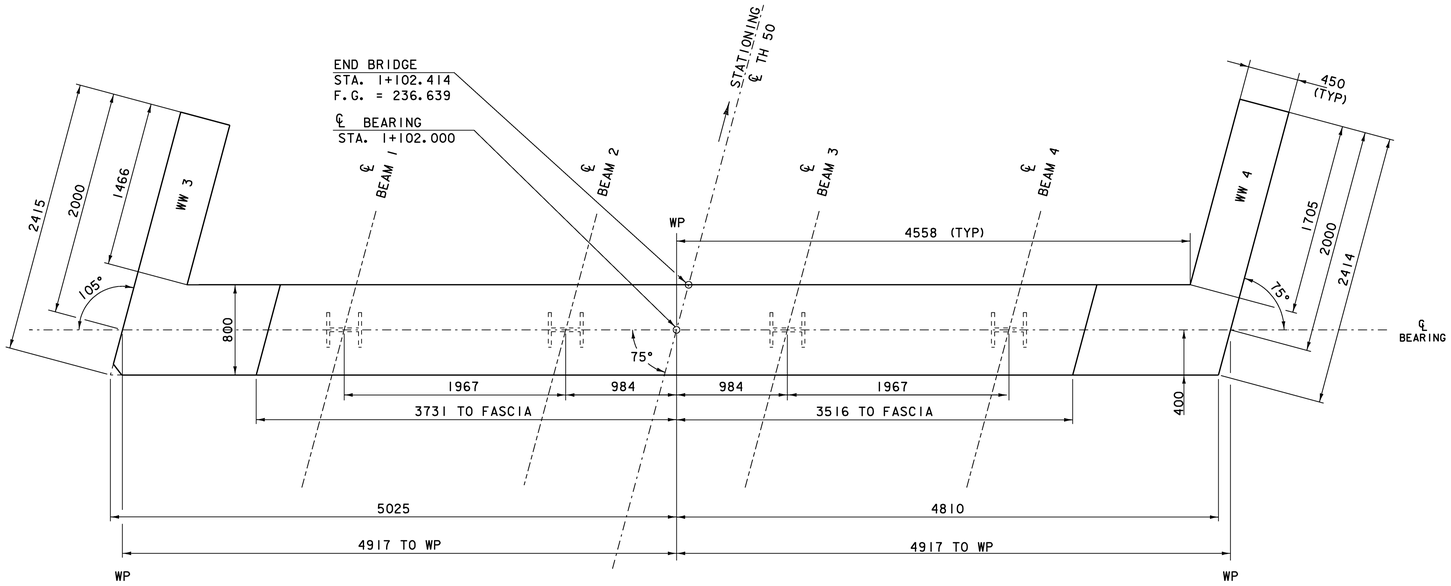

ABUTMENT #2 PLAN

(SCALE 1 : 25)

FLOW

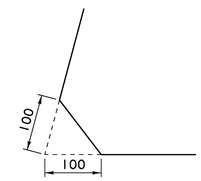

ABUTMENT ACCUTE ANGLE CLIP DETAIL

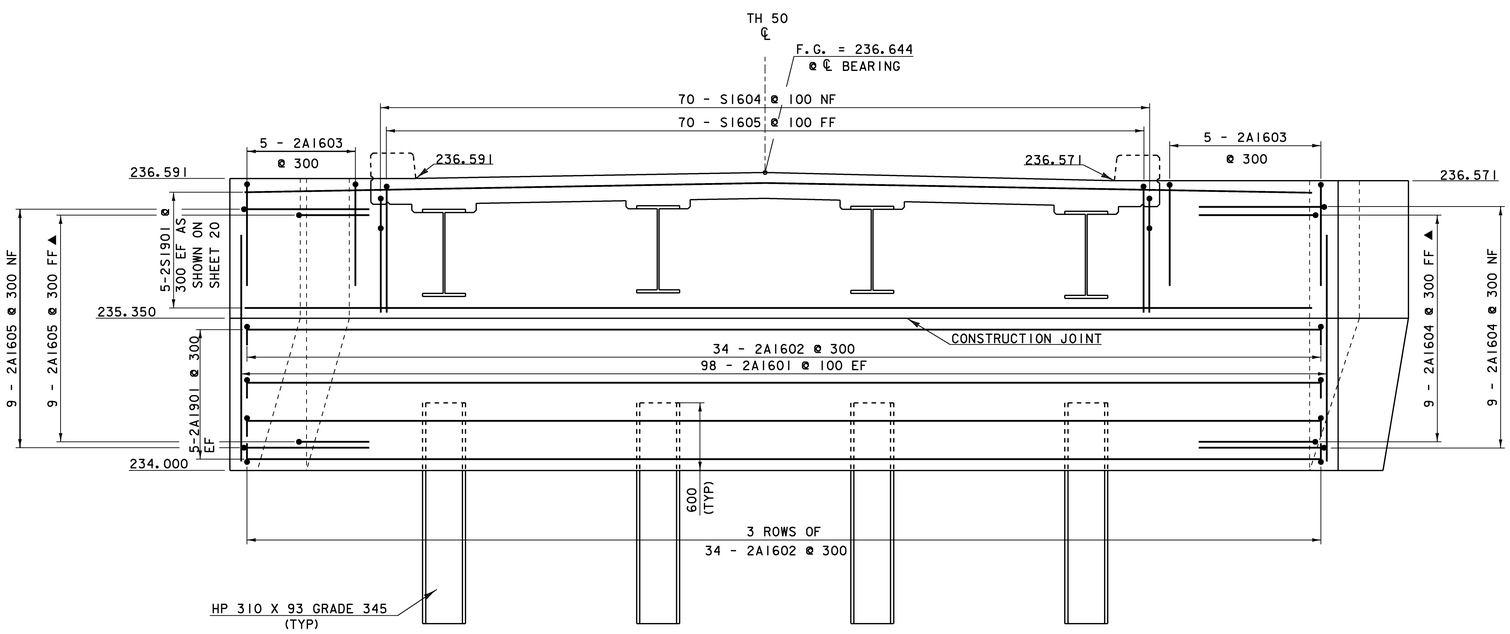

ABUTMENT #2 ELEVATION

(SCALE 1 : 25)

NOTES:

1: ALL PILES SHALL BE CENTERED ALONG THE CENTERLINE OF BEARING WITH THE PILE WEB PARALLEL TO THE FACE OF THE ABUTMENT.

2: SEE SHEET 24 FOR TYPICAL ABUTMENT SECTION.

NOTE:

NF = NEAR FACE
FF = FAR FACE
EF = EACH FACE
▲ = CUT TO FIT IN FIELD
80 CLR. UNLESS OTHERWISE SPECIFIED ON THE PLANS.
ALL LAPS SHALL BE 660 UNLESS NOTED OTHERWISE
ALL REINFORCING STEEL SHALL BE EPOXY COATED.

0 1 2

SCALE = 1:25

PROJECT: CORINTH	PROJECT NO.: STP BRO 1447 (22) (RE-ADVERTISED)
DESIGN FILE NAME: sj042sub.dgn	
IPARM FILE NAME: sj042a2.i	PLOT DATE: 16-JUL-2008
DESIGNED BY: H. I. SALLS	DRAWN BY: H. I. SALLS
SQUAD LEADER: C.P. WILLIAMS	CHECKED BY: R.S. YOUNG
ABUTMENT #2 PLAN & ELEVATION	SHEET: 25 OF 42

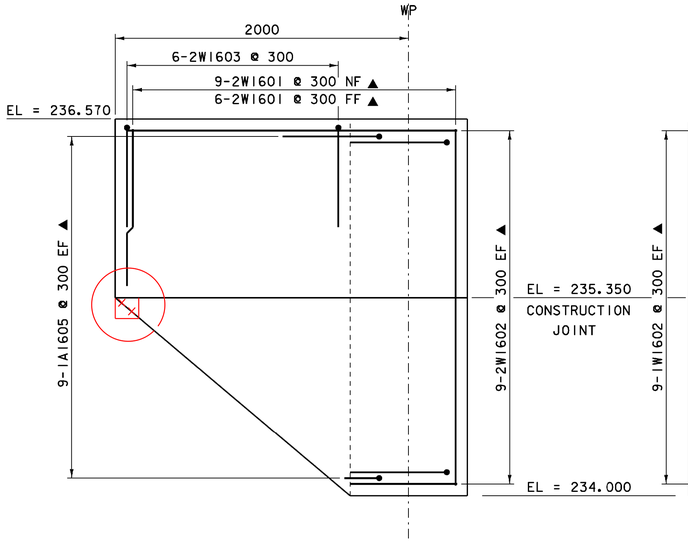

WINGWALL #2
SCALE = 1:20

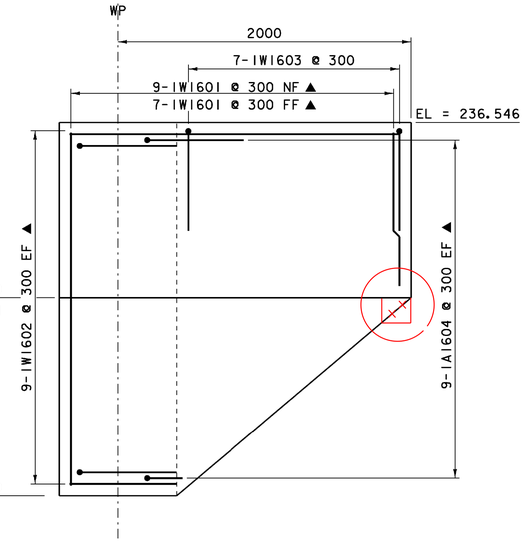

WINGWALL #1
SCALE = 1:20

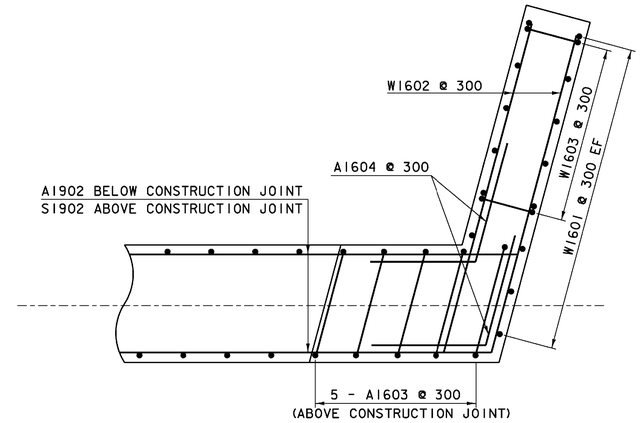

CORNER DETAIL
SCALE = 1:20

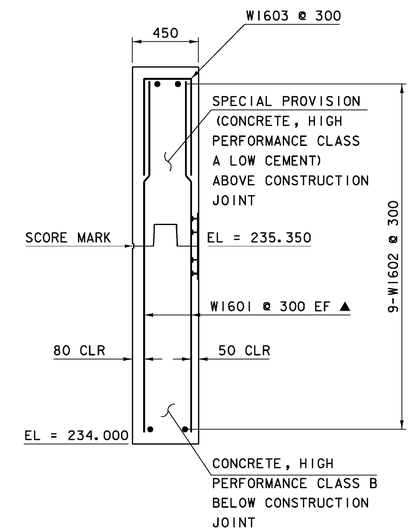

WINGWALL TYPICAL SECTION
SCALE = 1:20

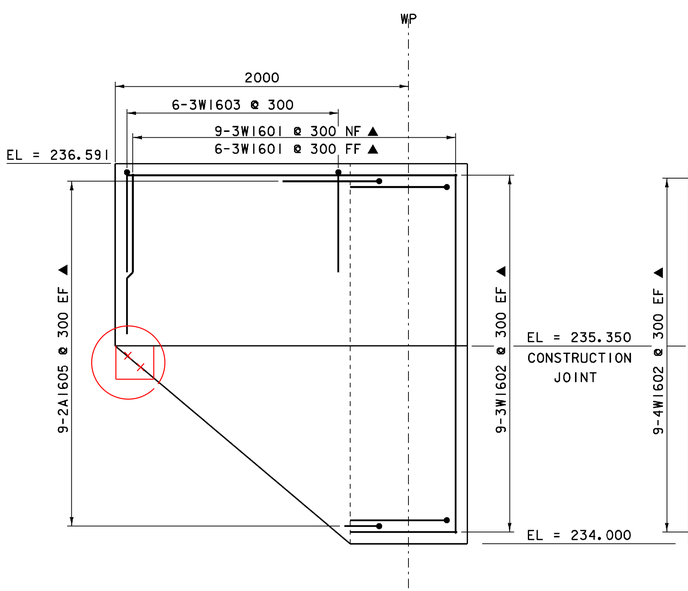

WINGWALL #3
SCALE = 1:20

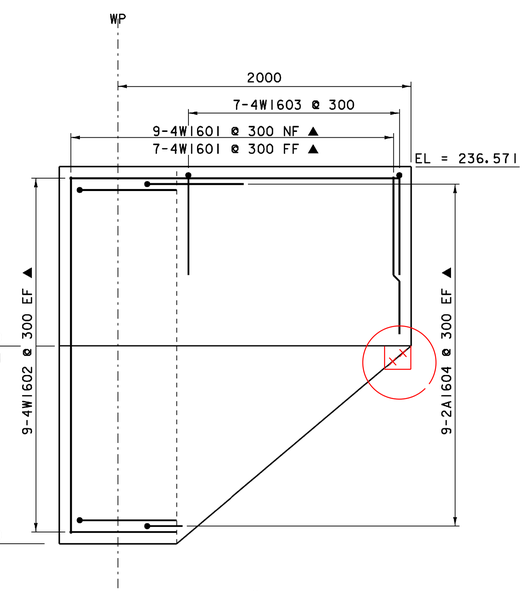

WINGWALL #4
SCALE = 1:20

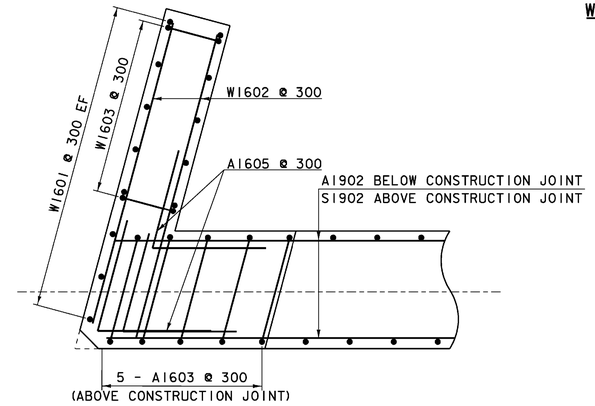

CORNER DETAIL
SCALE = 1:20

0 1 2
SCALE = 1:20

NOTE:

NF = NEAR FACE
FF = FAR FACE
EF = EACH FACE
▲ = CUT TO FIT IN FIELD
80 CLR. UNLESS OTHERWISE SPECIFIED ON THE PLANS.
ALL LAPS SHALL BE 660 UNLESS NOTED OTHERWISE
ALL REINFORCING STEEL SHALL BE EPOXY COATED.

PROJECT: CORINTH	PROJECT NO.: STP BRO 1447 (22) (RE-ADVERTISED)
DESIGN FILE NAME: sj042sub.dgn	
IPARM FILE NAME: sj042wws.i	PLOT DATE: 16-JUL-2008
DESIGNED BY: H.I. SALLS	DRAWN BY: M.FESSEL
SQUAD LEADER: C.P. WILLIAMS	CHECKED BY: R.S. YOUNG
WINGWALL DETAIL SHEET	SHEET: 26 OF 42

STATE OF VERMONT
AGENCY OF TRANSPORTATION

REINFORCING STEEL SCHEDULE

Metric

ITEM	EACH	SIZE	LENGTH	MARK	TYPE	A	B	C	D	E	F	G	H	J	K	R	O
	SUPERSTRUCTURE																
✳	193	16	7830	S1601	STR												
	200	16	6840	S1602	STR												
	196	16	2050	S1603	S5	660	285	215	230			660					
	140	16	1820	S1604	22		660	490	670								
✳	141	16	2550	S1605	17		1100	1450	---								
△	22	19	9670	S1901	STR												
	ABUTMENT #1																
✳	197	16	2010	1A1601	STR												
	136	16	970	1A1602	17		150	670	150								
	10	16	2890	1A1603	17		1110	670	1110								
▲	18	16	1320	1A1604	19		660	660					640		180		
▲	18	16	1320	1A1605	27		660	660					640		180		
△	12	19	9670	1A1901	STR												
	WINGWALL #1																
✳ ▲	17	16	2385	1W1601	STR												
▲	18	16	2240	1W1602	STR												
	7	16	1640	1W1603	17		660	320	660								
	WINGWALL #2																
▲	15	16	2410	2W1601	STR												
▲	18	16	2240	2W1602	STR												
	6	16	1640	2W1603	17		660	320	660								
	ABUTMENT #2																
✳	197	16	2010	2A1601	STR												
	136	16	970	2A1602	17		150	670	150								
	10	16	2950	2A1603	17		1140	670	1140								
▲	18	16	1320	2A1604	19		660	660					640		180		
▲	18	16	1320	2A1605	27		660	660					640		180		
△	12	19	9670	2A1901	STR												
	WINGWALL #3																
▲	15	16	2430	3W1601	STR												
▲	18	16	2240	3W1602	STR												
	6	16	1640	3W1603	17		660	320	660								
	WINGWALL #4																
✳ ▲	17	16	2410	4W1601	STR												
▲	18	16	2240	4W1602	STR												
	7	16	1640	4W1603	17		660	320	660								

ITEM	EACH	SIZE	LENGTH	MARK	TYPE	A	B	C	D	E	F	G	H	J	K	R	O

~ NOTES ~

1. UNLESS OTHERWISE DESIGNATED, ALL BAR REINFORCEMENT FOR CONCRETE IN SIZES UP TO AND INCLUDING 55M SHALL CONFORM TO THE REQUIREMENTS OF THE "SPECIFICATIONS FOR DEFORMED BILLET-STEEL BARS FOR CONCRETE REINFORCEMENT", AASHTO M 31M (ASTM A 615M-SI). ALL BARS SHALL BE GRADE 420, UNLESS OTHERWISE DESIGNATED.
2. FOR TYPICAL BENDING DETAILS, RECOMMENDED PIN DIAMETER "D" OF BENDS AND HOOKS, AND OTHER STANDARD PRACTICE, SEE CURRENT CONCRETE REINFORCING STEEL INSTITUTE "MANUAL OF STANDARD PRACTICE".
3. BARS WHICH REQUIRE MORE ACCURATE BENDING THAN STANDARD PRACTICES SHOULD HAVE LIMITS INDICATED.
4. ALL DIMENSIONS ARE OUT TO OUT OF BAR EXCEPT "A" AND "G" ON STANDARD 180 DEGREE AND 135 DEGREE HOOKS.
5. "J" DIMENSION ON 180 DEGREE HOOKS TO BE SHOWN ONLY WHERE NECESSARY TO RESTRICT HOOK SIZE. OTHERWISE, STANDARD HOOKS ARE TO BE USED.
6. "H" DIMENSION ON STIRRUPS TO BE SHOWN ONLY WHEN NECESSARY TO MAINTAIN CLEARANCES.
7. WHERE SLOPE DIFFERS FROM 45 DEGREES, DIMENSIONS "H" AND "K" MUST BE SHOWN.
8. ▲ DENOTES BARS TO BE CUT IN FIELD.
9. ✳ DENOTES ONE EXTRA BAR ADDED FOR TESTING PURPOSES.
10. △ DENOTES TWO EXTRA BARS ADDED FOR TESTING PURPOSES.

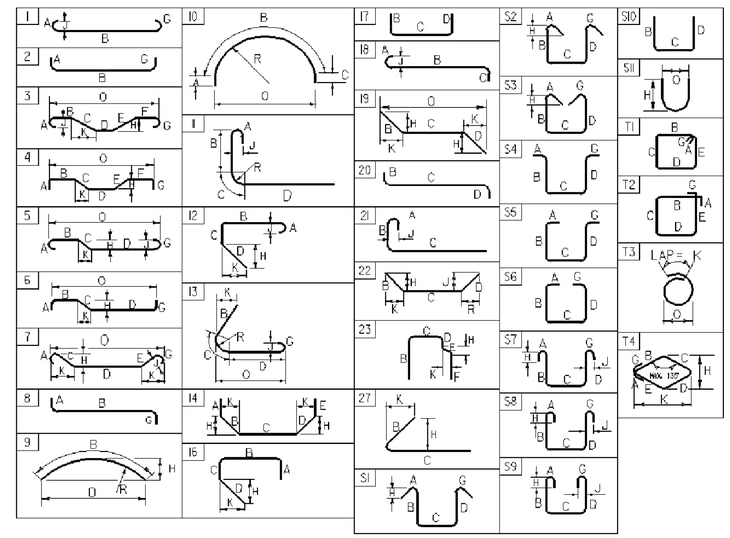

ASTM STANDARD REINFORCING BARS				
BAR SIZE	NOMINAL MASS (Kg/m)	NOMINAL DIMENSIONS ROUND SECTION		
		DIAMETER (mm)	CROSS SECTIONAL AREA (mm²)	PERIMETER (mm)
#10	0.560	9.5	71	29.84
#13	0.994	12.7	129	39.90
#16	1.552	15.9	199	49.95
#19	2.235	19.1	284	60.00
#22	3.042	22.2	387	69.74
#25	3.973	25.4	510	79.80
#29	5.060	28.7	645	90.16
#32	6.404	32.3	819	101.47
#36	7.907	35.8	1006	112.47
#43	11.380	43.0	1452	135.09
#57	20.240	57.3	2581	180.01

PROJECT NAME: **CORINTH**
PROJECT NUMBER: **STP BRO 1447 (22) (RE-ADVERTISED)**

FILE NAME: **sj042excel.dgn** PLOT DATE: **2/28/2008**
PROJECT MANAGER: **C.P. WILLIAMS** DRAWN BY: **J. WHITE**
DESIGNED BY: **H.I.SALLS** CHECKED BY: **R.S.YOUNG**
REINFORCING STEEL SCHEDULE SHEET #1 SHEET 27 OF 42

EROSION CONTROL NARRATIVE

1.1 PROJECT DESCRIPTION

THIS PROJECT INVOLVES THE REMOVAL AND REPLACEMENT OF BRIDGE #34 AND ITS ABUTMENTS, AND SOME MINOR APPROACH WORK. BRIDGE #34 IS LOCATED IN THE TOWN OF CORINTH ON TH 50, APPROXIMATELY 0.4 KILOMETERS SOUTH OF THE INTERSECTION OF TH 50 AND TH 2. THE NEW BRIDGE WILL BE A SINGLE SPAN STEEL BEAM , 23.328 METERS IN LENGTH SPANNING THE SOUTH BRANCH OF THE WAITS RIVER. THE NEW BRIDGE WILL BE LOCATED ON THE SAME ALIGNMENT AND THEREFORE REQUIRE ONLY MINOR WORK TO THE APPROACHES.

NOTE: AREA OF DISTURBANCE SHALL INCLUDE LIMITS OF EARTH DISTURBANCE WITHIN THE PROJECT AREA, INCLUDING ANY WASTE, STAGING AND BORROW AREAS WITHIN OR DIRECTLY ADJACENT TO THE PROJECT LIMITS.

TOTAL AREA OF DISTURBANCE IS APPROXIMATELY 0.146 HECTARES (0.36 ACRES).

IT IS ANTICIPATED THAT THIS PROJECT WILL LAST ONE CONSTRUCTION SEASON.

1.2 SITE INVENTORY

1.2.1 OFF SITE DRAINAGE CHARACTERISTICS (UP AND DOWN-GRADIENT)

THE PROPERTY SURROUNDING THE PROJECT SITE CONSISTS OF WELL ESTABLISHED VEGETATION WITH MODERATE SLOPES AT THE PROJECT SITE AND VERY STEEP SLOPES AT THE OUTER EDGES OF THE PROJECT LOCATION. THE SURROUNDING AREA OF THE PROJECT SITE IS MOSTLY GRASSLAND WITH WOODS IN THE DISTANCE. DUE TO THE NATURE OF THE SURROUNDING TERRAIN, RUNOFF WATER ENTERING THE CONSTRUCTION AREA WILL PRIMARILY BE LIMITED TO THAT WHICH IS CONVEYED ALONG ROADWAY DITCHES.

1.2.2 DRAINAGE, WATERWAYS, BODIES OF WATER, AND PROXIMITY TO NATURAL OR MAN-MADE WATER FEATURES

THE SOUTH BRANCH OF THE WAITS RIVER IS THE ONLY WATER SOURCE ON OR NEAR THE PROJECT LOCATION. THE RIVER IS CHARACTERIZED AS STRAIGHT, PROBABLY INCISED AND ALLUVIAL, NOT BRAIDED OR ANABRANCHED CONTAINING A STREAM BED OF GRAVEL, SOME SAND, AND COBBLES. THE RIVER HAS A TENDENCY TO RISE QUICKLY. THE TRIBUTARY AREA AT THE BRIDGE CROSSING IS 93.8 SQUARE KILOMETERS. THERE ARE CLASS III WETLANDS ON THE SOUTHWEST SIDE OF THE BRIDGE AND A DRAINAGE DITCH ON THE NORTHWEST SIDE OF THE BRIDGE. ALL DISTURBED SOILS ARE WITHIN 50 METERS OF RECEIVING WATERS.

1.2.3 TOPOGRAPHY, EXISTING ROADS, BUILDINGS, UTILITIES

THE TOPOGRAPHY OF THE PROJECT SITE IS MOSTLY OPEN FIELDS WITH PATCHES OF WOODED AREAS.THE TERRAIN IS MOSTLY FLAT WITH SOME STEEP SPOTS IN THE DISTANCE. THERE IS ONE HOUSE LOCATED NEAR THE PROJECT SITE. TH 2, TH 50, AND TH 65 ARE IN OR NEAR THE PROJECT SITE.

1.2.4 VEGETATION

THE VEGETATION IN THE PROJECT AREA CONSISTS OF GRASS. UPON PROJECT COMPLETION, THE CHANNEL WILL BE ARMORED WITH STONE FILL TYPE II AS SPECIFIED ON THE PLANS. DISTURBED VEGETATION WILL BE REESTABLISHED WITH STANDARD SEED AND MULCH PRACTICES.

1.2.5 SOILS

ALL SOIL DATA CAME FROM THE U.S. DEPARTMENT OF AGRICULTURE SOIL CONSERVATION SERVICE FOR THE COUNTY OF ORANGE, VERMONT. THE SOIL TYPES IDENTIFIED FOR THIS PROJECT ARE WINOOSKI VERY FINE SANDY LOAM AND HADLEY VERY FINE SANDY LOAM, WITH K-VALUES OF 0.49 EACH.

NOTE: K-VALUES GENERALLY INDICATE THE FOLLOWING: 0.0-0.23 = LOW EROSION POTENTIAL; 0.24-0.36 = MODERATE EROSION POTENTIAL: 0.37 AND HIGHER = HIGH EROSION POTENTIAL.

1.2.6 SENSITIVE RESOURCE AREAS

CRITICAL HABITATS: NO
HISTORICAL OR ARCHEOLOGICAL AREAS: NO
PRIME AGRICULTURAL LAND: YES - USDA CLEARANCE 02/24/98
THREATENED AND ENDANGERED SPECIES: NO
WATER RESOURCE: SOUTH BRANCH OF THE WAITS RIVER
WETLANDS: YES - CLASS III

1.3 RISK EVALUATION

THIS PROJECT DOES NOT FALL UNDER THE JURISDICTION OF CONSTRUCTION GENERAL PERMIT 3-9020 BASED ON THE PROJECT IMPACT AREA. SHOULD CHANGES PRIOR TO OR DURING CONSTRUCTION RESULT IN ONE OR MORE ACRES OF EARTH DISTURBANCE OR SHOULD THE PROJECT BECOME PART OF A LARGER PLAN OF DEVELOPMENT, THEN THE SELECTED CONTRACTOR WILL BE RESPONSIBLE FOR ADDITIONAL PERMITTING WITH VAHR VIA FILING OF THE APPROPRIATE NOTICE OF INTENT UNDER THE CONSTRUCTION GENERAL PERMIT PROCESS.

1.4 EROSION PREVENTION AND SEDIMENT CONTROL

THE EROSION CONTROL PLANS ARE MEANT AS A GUIDELINE FOR PREVENTING EROSION AND CONTROLLING SEDIMENT TRANSPORT. THE WORK OUTLINED IN THIS NARRATIVE CONSISTS OF APPLYING MEASURES THROUGHOUT THE LIFE OF THE PROJECT MINIMIZING SEDIMENT TRANSPORT TO THE RECEIVING WATERS. THE MEASURES INCLUDE STABILIZATION AND STRUCTURAL PRACTICES, STORM WATER CONTROLS AND OTHER POLLUTION PREVENTION CONTROLS.

PREVENTING INITIAL SOIL EROSION IS MUCH MORE EFFECTIVE THAN TREATING ERODED SEDIMENT. MAINTAINING VEGETATED BUFFERS ALONG STREAM BANKS, WETLANDS OR OTHER SENSITIVE AREAS IS A CRUCIAL EROSION AND SEDIMENT CONTROL MEASURE THAT SHOULD BE ESTABLISHED WHEREVER POSSIBLE.

ALL MEASURES SHALL BE REGULARLY MAINTAINED AND SHALL BE CHECKED FOR SEDIMENT BUILD-UP. SEDIMENT SHALL BE DISPOSED AT AN APPROVED SITE WHERE IT WILL NOT BE SUBJECT TO EROSION.

(REFER TO THE LOW RISK SITE HANDBOOK AND APPROPRIATE DETAIL SHEETS FOR EACH PRACTICE REQUIRED ON THE PROJECT WHICH MAY INCLUDE BUT IS NOT LIMITED TO THE FOLLOWING.)

1.4.1 MARK SITE BOUNDARIES
PROJECT DEMARCATION FENCING, DENOTED -PDF- ON THE PLANS, IS USED TO DELINEATE THE LIMITS THE CONTRACTOR CAN ACCESS WITH CONSTRUCTION EQUIPMENT. THIS MEASURE LIMITS THE AREA THAT CAN BE DISTURBED AND EXPOSED TO EROSION.

1.4.2 LIMIT DISTURBANCE AREA
EMPLOY TEMPORARY STABILIZATION PRACTICES IN INCREMENTAL STAGES (PHASING) AS CONSTRUCTION PROCEEDS. ADDITIONAL MEASURES MAY BE NEEDED DUE TO THE PHASING OF THE PROJECT AND AS DIRECTED BY THE ENGINEER.

1.4.3 STABILIZE CONSTRUCTION EXIT
STABILIZED CONSTRUCTION ENTRANCE SHALL BE UTILIZED AS NECESSARY.

1.4.4 INSTALL SILT FENCE
SILT FENCE SHALL BE INSTALLED PRIOR TO ANY UP SLOPE WORK AS SHOWN ON THE PLANS OR AS NECESSARY.

1.4.5 DIVERT UPLAND RUNOFF
SWALE (STORM WATER FROM STREET COLLECTIONS DRAINAGE SYSTEM)

1.4.6 SLOW DOWN CHANNELIZED RUNOFF
CHECK DAMS SHALL BE UTILIZED AS NECESSARY.

1.4.7 CONSTRUCT PERMANENT CONTROLS
TYPE I, II, STONE FOR SLOPE LINING AND CHANNEL PROTECTION
SEED AND MULCH
DRAINAGE INLETS AND PIPING
SOIL RETENTION WALLS

STREAM BANK VEGETATION WILL BE INTRODUCED IN THE GRUBBING MATERIAL THAT IS TO BE PLACED OVER THE STREAM BANK STONE FILL.

1.4.8 STABILIZE EXPOSED SOILS
SEED AND MULCH
EROSION MATTING

TRACKING OF ALL EXPOSED SLOPES, COMBINED WITH TEMPORARY MULCHING, WILL BE UTILIZED ON A REGULAR BASIS. SLOPES SHALL BE STABILIZED WITHIN 48 HOURS OF FORECASTED RAIN.
SEEDING, MULCHING AND BIODEGRADABLE EROSION CONTROL MATTING OR AN EQUIVALENT SHALL BE USED TO STABILIZE ALL SLOPES STEEPER THAN 1:3. THESE SLOPES SHALL BE STABILIZED WITHIN 48 HOURS OF REACHING INTERMITTENT PHASES OF CONSTRUCTION.

1.4.9 WINTER STABILIZATION
VARIOUS MEASURES SPECIFIC TO WINTER (SEE LOW RISK HANDBOOK)

1.4.10 STABILIZE SOIL AT FINAL GRADE
SEED AND MULCH
EROSION MATTTING

SEEDING, MULCHING AND BIODEGRADABLE EROSION CONTROL MATTING OR AN EQUIVALENT SHALL BE USED TO STABILIZE ALL SLOPES STEEPER THAN 1:3. THESE SLOPES SHALL BE STABILIZED WITHIN 48 HOURS OF REACHING FINAL GRADE.

1.4.11 DE-WATERING ACTIVITIES

1.4.12 INSPECT YOUR SITE
INSPECT SITE BASED ON PERMIT AUTHORIZATION OR SPECIAL PROVISION REQUIREMENTS.

VAOT Metric

SOIL CLASSIFICATION
HADLEY VERY FINE SANDY LOAM
0-3% SLOPES
"K FACTOR" 0.49

VT. STATE PLANE GRID
N

DUSENBURY, PETER B & KIMBERLY S.

BRUCCOLI, ARLYN F.

RIPARIAN BUFFER

SOUTH BRANCH OF WALTS RIVER

BRUSH

GRASS

235.00

BM #1
RRSIT
M. POP
EL. 236.487

M. POP

WETLAND
CLASS III

S. ELM

M. CHERRY

PT4

236.00

1+040

1+060

1+080

1+120

1+140

1+160

T.H. 50
(GRAVEL)

TEL. J. BOX

FIELD
DRIVE

COMB
2

S. CHERRY

COMB
3

TO
M. ELM

AERIAL
TELEPHONE

FENCE

EXISTING 3 ROD R.O.W.

BRUSH

S. ASH

GRAVEL
DRIVE

MB

M. MAPLE

T.H. 65
(GRAVEL)

T.H. 50
(GRAVEL)

U/G TEL.
J. BOX

S. POP
S. POP
S. POP

HUTCHINS, JAMES S.
& JENNIFER G.

BUONANDUCI, MICHAEL A., JR.
& LINDA M.

SOIL CLASSIFICATION
WINOOSKI VERY FINE SANDY LOAM
0-3% SLOPES
"K FACTOR" 0.49

EXISTING BRIDGE DATA

FAILED STEEL PONY TRUSS SUPPORTED
BY TWO LARGE ROLLED BEAMS BEARING
ON CONCRETE ABUTMENTS.
OVERALL LENGTH = 17.100 m
BRIDGE WIDTH = 3.566 m

LEGEND

CLASS III WETLANDS

RIPARIAN BUFFER ZONE

EPSC EXISTING CONDITIONS SITE PLAN

0 10 20
SCALE 1:250

PROJECT: CORINTH	PROJECT NO.: STP BRO 1447 (22) (RE-ADVERTISED)
DESIGN FILE NAME: 93J042/structures/s93J042bdr ero.dgn	
IPARM FILE NAME: sJ042excon.I	PLOT DATE: 16-JUL-2008
DESIGNED BY: M.FESSEL	DRAWN BY: M.FESSEL
SQUAD LEADER: C.P. WILLIAMS	CHECKED BY: R.S.YOUNG
EPSC EXISTING CONDITIONS SITE PLAN	SHEET: 29 OF 42

NOTES:

1. THESE PLANS SHOW A CONCEPTUAL EROSION CONTROL PLAN. THE CONTRACTOR MUST SUBMIT A TEMPORARY EROSION CONTROL PLAN FOR APPROVAL.

2. TEMPORARY EROSION CONTROL MEASURES ARE CONCEPTUALLY SHOWN. THE CONTRACTOR MAY RELOCATE TEMPORARY MEASURES TO IMPROVE EROSION CONTROL WITH APPROVAL OF THE RESIDENT ENGINEER AND ON SITE COORDINATOR. SILT FENCE SHALL NOT BE INSTALLED ACROSS CONTOURS.

3. THE CONTRACTOR SHALL USE OTHER TEMPORARY EROSION CONTROL MEASURES AS NECESSITATED BY THE SEQUENCE OF CONSTRUCTION OR AS DIRECTED BY THE RESIDENT ENGINEER AND ON SITE COORDINATOR.

4. REFER TO TEMPORARY EROSION CONTROL DETAIL SHEETS FOR ADDITIONAL DETAILS.

5. WHERE LEDGE IS EXPOSED, GRAVEL BAGS MAY BE USED INSTEAD OF FILTER CURTAIN. PAYMENT FOR THIS ITEM SHALL BE INCIDENTAL TO ITEM 649.61 "GEOTEXTILE FOR FILTER CURTAIN".

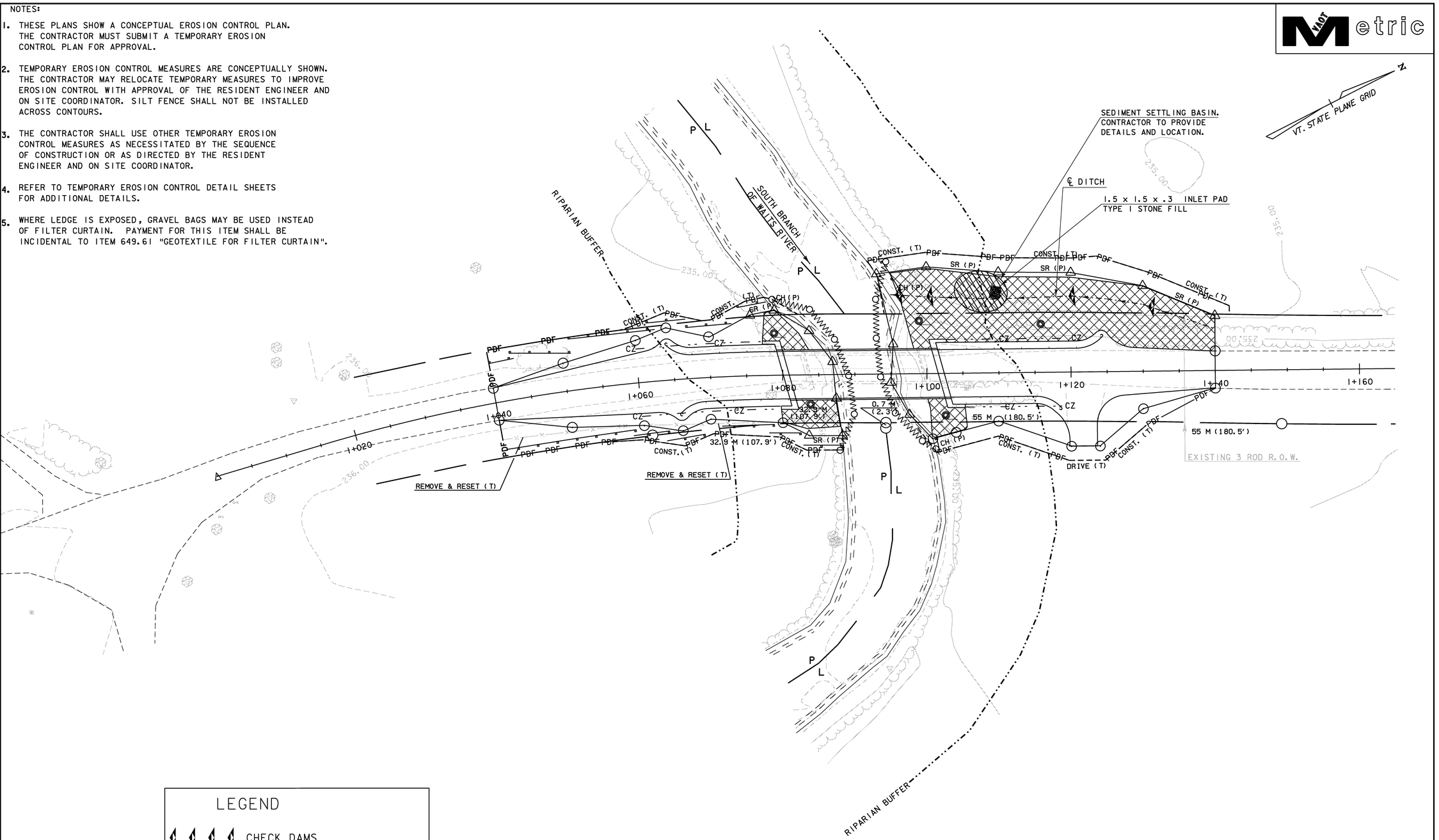

LEGEND

- CHECK DAMS
- EROSION MATTING
- LIMITS OF CONSTRUCTION
- PDF — PROJECT DEMARCATION FENCE
- RIPARIAN BUFFER
- SILT FENCE
- TURBIDITY CURTAIN

0 10 20

SCALE 1:250

EPSC CONSTRUCTION SITE PLAN

PROJECT: CORINTH	PROJECT NO.: STP BRO 1447 (22) (RE-ADVERTISED)
DESIGN FILE NAME: 93J042/structures/s93J042bdr ero.dgn	
IPARM FILE NAME: sJ042epscplan.i	PLOT DATE: 16-JUL-2008
DESIGNED BY: M.FESSEL	DRAWN BY: M.FESSEL
SQUAD LEADER: C.P. WILLIAMS	CHECKED BY: R.S.YOUNG
EPSC CONSTRUCTION SITE PLAN	SHEET: 30 OF 42

VAOT Metric

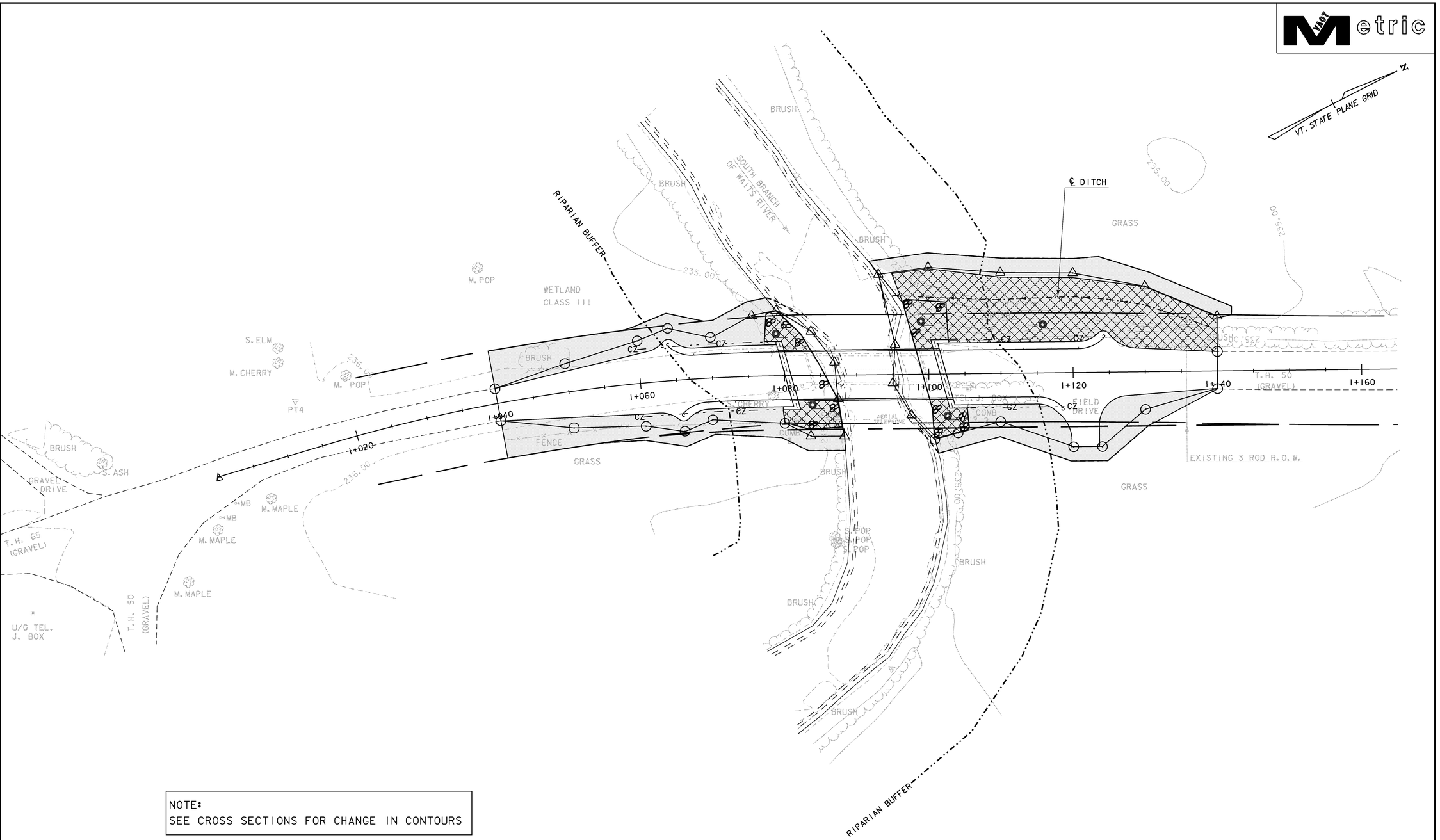

NOTE:
SEE CROSS SECTIONS FOR CHANGE IN CONTOURS

LEGEND

- DISTURBED AREAS REQUIRING RE-VEGETATION
- EROSION MATTING
- LIMITS OF CONSTRUCTION
- RIPARIAN BUFFER

0 10 20
SCALE 1:250

EPSC FINAL CONDITIONS SITE PLAN

PROJECT: CORINTH	PROJECT NO.: STP BRO 1447 (22) (RE-ADVERTISED)
DESIGN FILE NAME: 93J042/structures/s93J042bdr ero.dgn	
IPARM FILE NAME: sJ042fincon.I	PLOT DATE: 16-JUL-2008
DESIGNED BY: M.FESSEL	DRAWN BY: M.FESSEL
SQUAD LEADER: C.P. WILLIAMS	CHECKED BY: R.S.YOUNG
EPSC FINAL CONDITIONS SITE PLAN	SHEET: 31 OF 42

SYMBOL

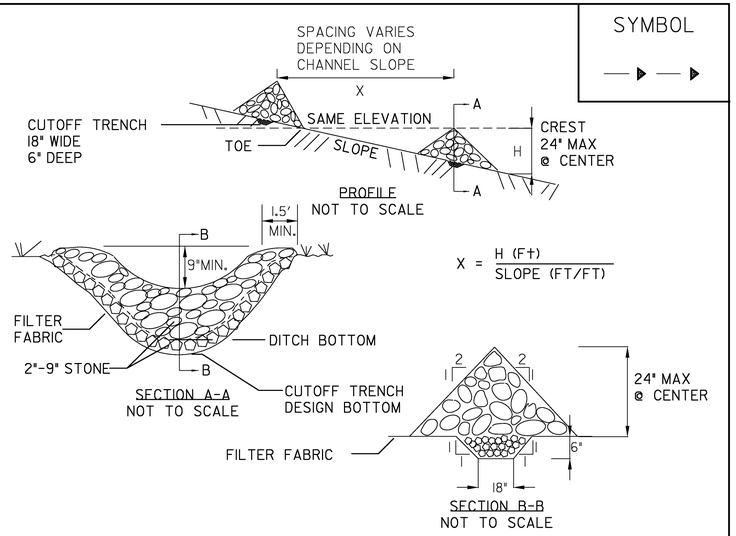

$$X = \frac{H\ (FT)}{SLOPE\ (FT/FT)}$$

CONSTRUCTION SPECIFICATIONS

1. STONE WILL BE PLACED ON A FILTER FABRIC FOUNDATION.
2. SET SPACING OF CHECK DAMS SO THAT THE ELEVATION OF THE CREST OF THE DOWNSTREAM DAM IS AT THE SAME ELEVATION AS THE TOE OF THE UPSTREAM DAM.
3. EXTEND THE STONE A MINIMUM OF 1.5 FEET BEYOND THE DITCH BANKS TO PREVENT CUTTING AROUND THE DAM.
4. PROTECT THE CHANNEL DOWNSTREAM OF THE LOWEST CHECK DAM FROM SCOUR AND EROSION WITH STONE OR LINER AS APPROPRIATE.
5. ENSURE THAT CHANNEL APPURTENANCES SUCH AS CULVERT ENTRANCES BELOW CHECK DAMS ARE NOT SUBJECT TO DAMAGE OR BLOCKAGE FROM DISPLACED STONE.

MAXIMUM DRAINAGE AREA 2 ACRES.

ADAPTED FROM DETAILS PROVIDED BY: NEW YORK STATE DECORIGINALLY DEVELOPED BY USDA-NRCSVERMONT DEPARTMENT OF ENVIRONMENTAL CONSERVATION

CHECK DAM

NOTES:
REFER TO "THE VERMONT STANDARDS & SPECIFICATIONS FOR EROSION PREVENTION & SEDIMENT CONTROL -2006- " FROM THE VT AGENCY OF NATURAL RESOURCES FOR ADDITIONAL GUIDANCE.

THIS ITEM SHALL BE PAID FOR UNDER ITEM
653.25 TEMPORARY STONE CHECK DAM, TYPE I

REVISIONS	
MARCH 8, 2007	JMF

SYMBOL

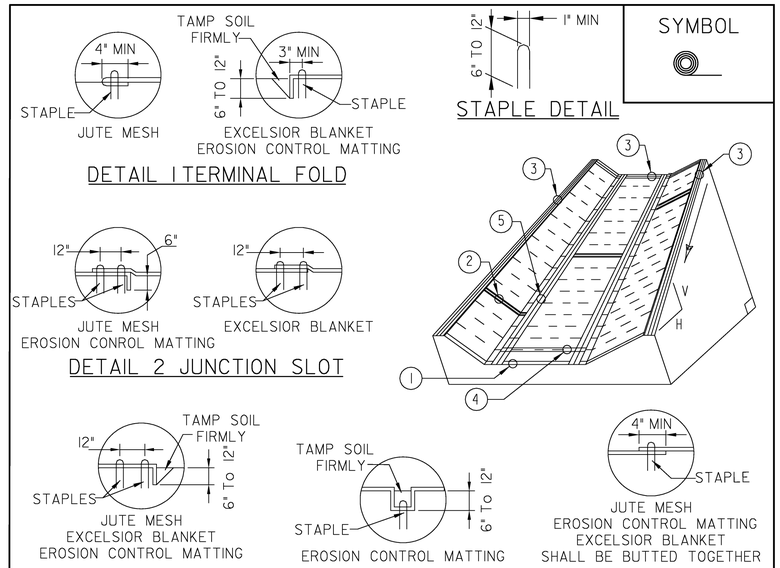

CONSTRUCTION SPECIFICATIONS

1. EROSION MATTING, CHECK SLOTS, SHALL BE SPACED IN DITCH CHANNEL SO THAT ONE OCCURS WITHIN EACH 50' ON SLOPES OF MORE THAN 4% AND LESS THAN 6%. ON SLOPES OF 6% OR MORE, THEY SHALL BE SPACED SO THAT ONE OCCURS WITHIN EACH 25'.
2. APPLY FERTILIZER, LIME SEED PRIOR TO PLACING MATTING.
3. STAPLES ARE TO BE PLACED ALTERNATELY, IN COLUMNS APPROXIMATELY 2' APART AND IN ROWS APPROXIMATELY 3' APART. APPROXIMATELY 175 STAPLES ARE REQUIRED PER 4'X225' ROLL OF MATERIAL AND 125 STAPLES ARE REQUIRED PER 4'X150' ROLL OF MATERIAL.
4. DISTURBED AREAS SHALL BE SMOOTHLY GRADED. EROSION CONTROL MATERIAL SHALL BE PLACED LOOSELY OVER GROUND SURFACE. DO NOT STRETCH.
5. ALL TERMINAL ENDS AND TRANSVERSE LAPS SHALL BE STAPLED AT APPROXIMATELY 12" INTERVALS.

ADAPTED FROM DETAILS PROVIDED BY: ILLINOIS USDA-NRCS
ORIGINALLY DEVELOPED BY USDA-NRCS
VERMONT DEPARTMENT OF ENVIRONMENTAL CONSERVATION

ROLLED EROSION CONTROL PRODUCT (RECP) DITCH

NOTES:
REFER TO "THE VERMONT STANDARDS & SPECIFICATIONS FOR EROSION PREVENTION & SEDIMENT CONTROL -2006- " FROM THE VT AGENCY OF NATURAL RESOURCES FOR ADDITIONAL GUIDANCE.

THIS ITEM SHALL BE PAID FOR UNDER ITEM
653.20 TEMPORARY EROSION MATTING OR
653.21 PERMANENT EROSION MATTING

REVISIONS	
MARCH 8, 2007	JMF
APRIL 16, 2007	WHF

SYMBOL

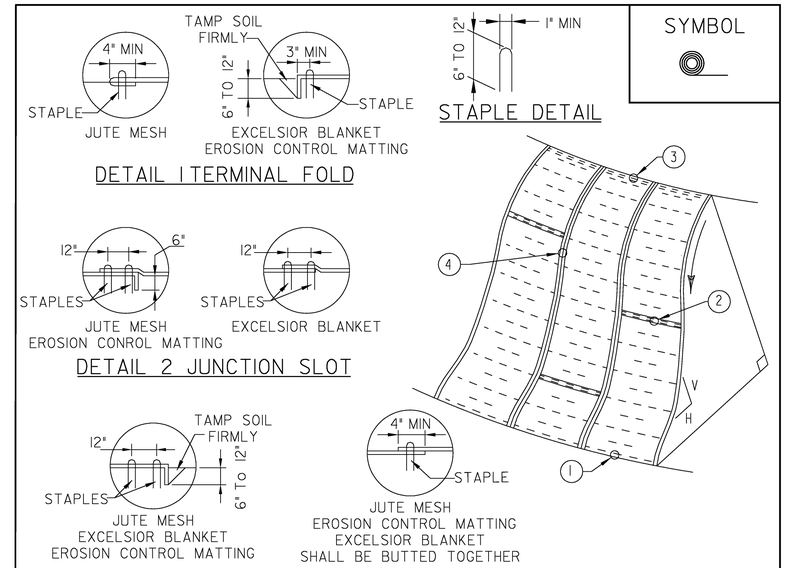

CONSTRUCTION SPECIFICATIONS

1. APPLY TO SLOPES GREATER THAN 3H:1V OR WHERE NECESSARY TO AID IN ESTABLISHING VEGETATION.
2. APPLY FERTILIZER, LIME AND SEED PRIOR TO PLACING MATTING.
3. STAPLES ARE TO BE PLACED ALTERNATELY, IN COLUMNS APPROXIMATELY 2' APART AND IN ROWS APPROXIMATELY 3' APART. APPROXIMATELY 175 STAPLES ARE REQUIRED PER 4'X225' ROLL OF MATERIAL AND 125 STAPLES ARE REQUIRED PER 4'X150' ROLL OF MATERIAL.
4. DISTURBED AREAS SHALL BE SMOOTHLY GRADED. EROSION CONTROL MATERIAL SHALL BE PLACED LOOSELY OVER GROUND SURFACE. DO NOT STRETCH.
5. ALL TERMINAL ENDS AND TRANSVERSE LAPS SHALL BE STAPLED AT APPROXIMATELY 12" INTERVALS.

ADAPTED FROM DETAILS PROVIDED BY: ILLINOIS USDA-NRCS
ORIGINALLY DEVELOPED BY USDA-NRCS
VERMONT DEPARTMENT OF ENVIRONMENTAL CONSERVATION

ROLLED EROSION CONTROL PRODUCT (RECP) SIDE SLOPE

NOTES:
REFER TO "THE VERMONT STANDARDS & SPECIFICATIONS FOR EROSION PREVENTION & SEDIMENT CONTROL -2006- " FROM THE VT AGENCY OF NATURAL RESOURCES FOR ADDITIONAL GUIDANCE.

THIS ITEM SHALL BE PAID FOR UNDER ITEM
653.20 TEMPORARY EROSION MATTING OR
653.21 PERMANENT EROSION MATTING

NEW	
APRIL 16, 2007	WHF
REVISIONS	

EPSC DETAIL SHEETS

NTS

PROJECT: CORINTH	PROJECT NO.: STP BRO 1447(22) (RE-ADVERTISED)
DESIGN FILE NAME: 93J042\Structures\s93J042erodetails.dgn	
IPARM FILE NAME: 93J042epscl.i	PLOT DATE: 16-JUL-2008
DESIGNED BY: CONST. ENV. SECTION	DRAWN BY: CONST. ENV. SECT.
SQUAD LEADER: C.P. WILLIAMS	CHECKED BY: ANDREA CABRAL
EPSC DETAILS - SHEET 1	SHEET: 32 OF 42

SYMBOL

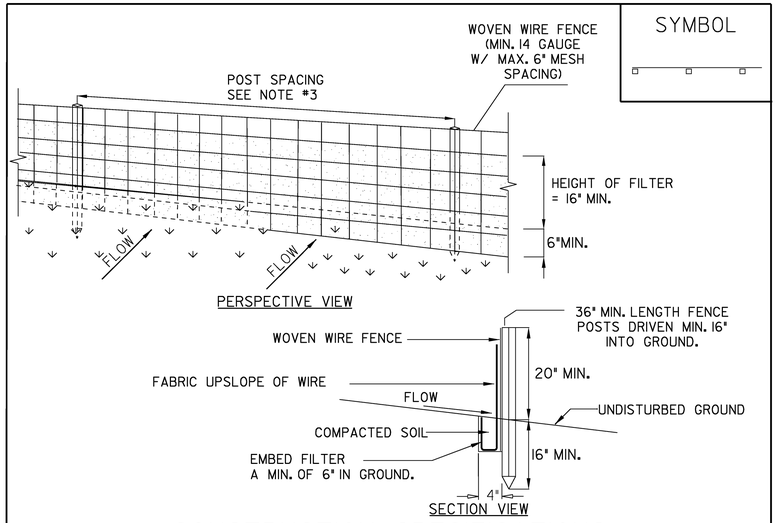

CONSTRUCTION SPECIFICATIONS

1. WOVEN WIRE FENCE REINFORCEMENT IS ONLY REQUIRED WITHIN 100 FT UPSLOPE OF RECEIVING WATERS.

2. WHERE REQUIRED FENCE SHALL BE WOVEN WIRE, MIN. 14 GAUGE WITH A 6" MAXIMUM MESH OPENING. FILTER CLOTH SHALL BE EITHER FILTER X, MIRAFI100X, STABILINKA T140N OR APPROVED EQUIVALENT.

3. POST SPACING FOR WIRE-BACKED FENCE SHALL BE 10' MAXIMUM. FOR FILTER-CLOTH FENCE, WHEN ELONGATION IS >50%, POST SPACING SHALL NOT EXCEED 4'. FOR FILTER-CLOTH FENCE, WHEN ELONGATION IS <50%, POST SPACING SHALL NOT EXCEED 6'.

4. WOVEN WIRE FENCE IS TO BE FASTENED SECURELY TO FENCE POSTS WITH WIRE TIES. FILTER CLOTH IS TO BE FASTENED SECURELY TO WOVEN WIRE FENCE WITH TIES SPACED EVERY 24" AT TOP AND MID SECTION.

5. WHEN TWO SECTIONS OF FILTER CLOTH ADJOIN EACH OTHER THEY SHALL BE OVER-LAPPED BY SIX INCHES AND FOLDED.

6. PREFABRICATED UNITS SHALL BE GEOFAB, ENVIROFENCE, OR APPROVED EQUIVALENT.

7. MAINTENANCE SHALL BE PERFORMED AS NEEDED AND MATERIAL REMOVED WHEN SEDIMENT REACHES HALF OF FABRIC HEIGHT.

ADAPTED FROM DETAILS PROVIDED BY: NEW YORK STATE DEC
ORIGINALLY DEVELOPED BY USDA-NRCS
VERMONT DEPARTMENT OF ENVIRONMENTAL CONSERVATION

SILT FENCE

NOTES:
REFER TO "THE VERMONT STANDARDS & SPECIFICATIONS FOR EROSION PREVENTION & SEDIMENT CONTROL -2006- " FROM THE VT AGENCY OF NATURAL RESOURCES FOR ADDITIONAL GUIDANCE.

THIS ITEM SHALL BE PAID FOR UNDER ITEM
STANDARD SPECIFICIATION 649.51 GEOTEXTILE FOR SILT FENCE OR
~~SPECIAL PROVISION 900.675 (GEOTEXTILE FOR SILT FENCE, WOVEN WIRE REINFORCED)~~

SYMBOL

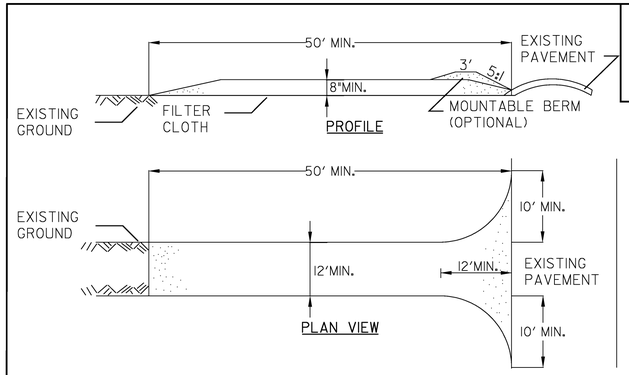

CONSTRUCTION SPECIFICATIONS

1. STONE SIZE - USE 1-4" STONE, OR RECLAIMED OR RECYCLED CONCRETE EQUIVALENT.
2. LENGTH - NOT LESS THAN 50 FEET (EXCEPT ON A SINGLE RESIDENCE LOT WHERE A 30 FOOT MINIMUM LENGTH APPLIES).
3. THICKNESS - NOT LESS THAN EIGHT (8) INCHES.
4. WIDTH - TWELVE (12) FOOT MINIMUM, BUT NOT LESS THAN THE FULL WIDTH AT POINTS WHERE INGRESS OR EGRESS OCCURS. TWENTY-FOUR (24) FOOT IF SINGLE ENTRANCE TO SITE.
5. GEOTEXTILE MUST BE PLACED OVER THE ENTIRE AREA PRIOR TO PLACING STONE.
6. SURFACE WATER - ALL SURFACE WATER FLOWING OR DIVERTED TOWARD CONSTRUCTION ENTRANCES SHALL BE PIPED BENEATH THE ENTRANCE. IF PIPING IS IMPRACTICAL, A MOUNTABLE BERM WITH 5:1 SLOPES WILL BE PERMITTED.
7. MAINTENANCE - THE ENTRANCE SHALL BE MAINTAINED IN A CONDITION WHICH WILL PREVENT TRACKING OR FLOWING OF SEDIMENT ONTO PUBLIC RIGHTS-OF-WAY, ALL SEDIMENT SPILLED, DROPPED, WASHED OR TRACKED ONTO PUBLIC RIGHTS-OF-WAY MUST BE REMOVED IMMEDIATELY.
8. WHEN WASHING IS REQUIRED, IT SHALL BE DONE ON AN AREA STABILIZED WITH STONE AND WHICH DRAINS INTO AN APPROVED SEDIMENT TRAPPING DEVICE.
9. PERIODIC INSPECTION AND NEEDED MAINTENANCE SHALL BE PROVIDED ACCORDING TO PERMIT REQUIREMENTS.

ADAPTED FROM DETAILS PROVIDED BY: NEW YORK STATE DEC
ORIGINALLY DEVELOPED BY USDA-NRCS
VERMONT DEPARTMENT OF ENVIRONMENTAL CONSERVATION

STABILIZED CONSTRUCTION ENTRANCE

NOTES:
REFER TO "THE VERMONT STANDARDS & SPECIFICATIONS FOR EROSION PREVENTION & SEDIMENT CONTROL -2006- " FROM THE VT AGENCY OF NATURAL RESOURCES FOR ADDITIONAL GUIDANCE.

THIS ITEM SHALL BE PAID FOR UNDER ITEM
653.35 VEHICLE TRACKING PAD

REVISIONS	
FEBRUARY 9, 2007	WHF
MARCH 8, 2007	JMF

SYMBOL

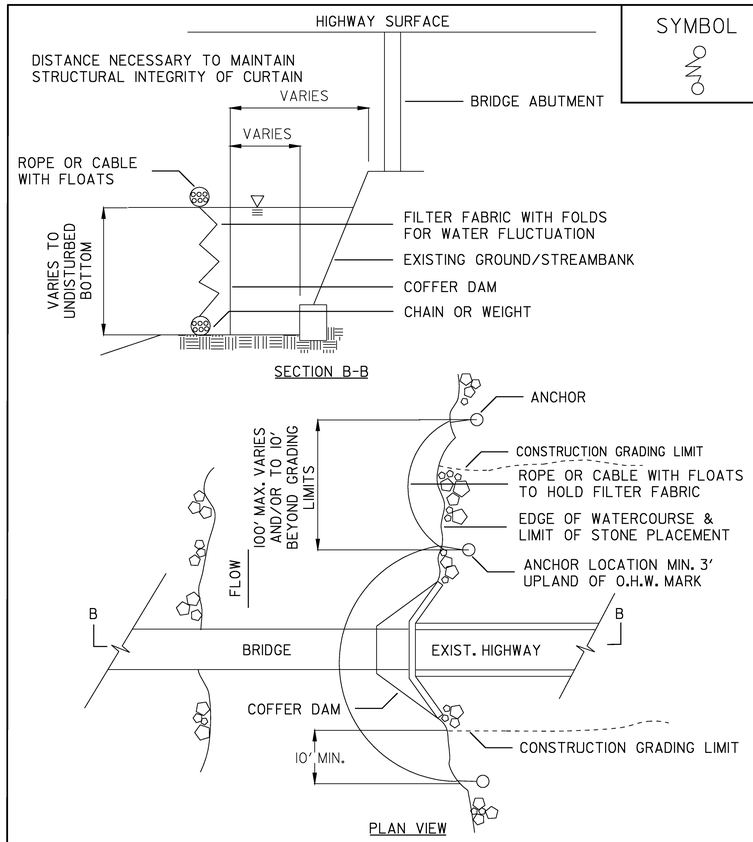

ADAPTED FROM DETAILS PROVIDED BY: NEW YORK STATE DEC
ORIGINALLY DEVELOPED BY USDA-NRCS
VERMONT AGENCY OF TRANSPORTATION

TURBIDITY CURTAIN

NOTES:
THIS ITEM SHALL BE PAID FOR UNDER ITEM
649.61 GEOTEXTILE FOR FILTER CURTAIN

EPSC DETAIL SHEETS

NTS

PROJECT: CORINTH	PROJECT NO.: STP BRO 1447(22) (RE-ADVERTISED)
DESIGN FILE NAME: 93J042\Structures\s93J042erodetails.dgn	
IPARM FILE NAME: 93J042epsc2.i	PLOT DATE: 16-JUL-2008
DESIGNED BY: CONST. ENV. SECTION	DRAWN BY: CONST. ENV. SECT.
SQUAD LEADER: C.P. WILLIAMS	CHECKED BY: ANDREA CABRAL
EPSC DETAILS - SHEET 2	SHEET: 33 OF 42

VAOT Metric

BEGIN R.O.W. PROJECT
BRO 1447 (22) STA. 1+053.8 7.5 M (25') RT.

END R.O.W. PROJECT
BRO 1447 (22) STA. 1+149.2 7.5 M (25') RT.

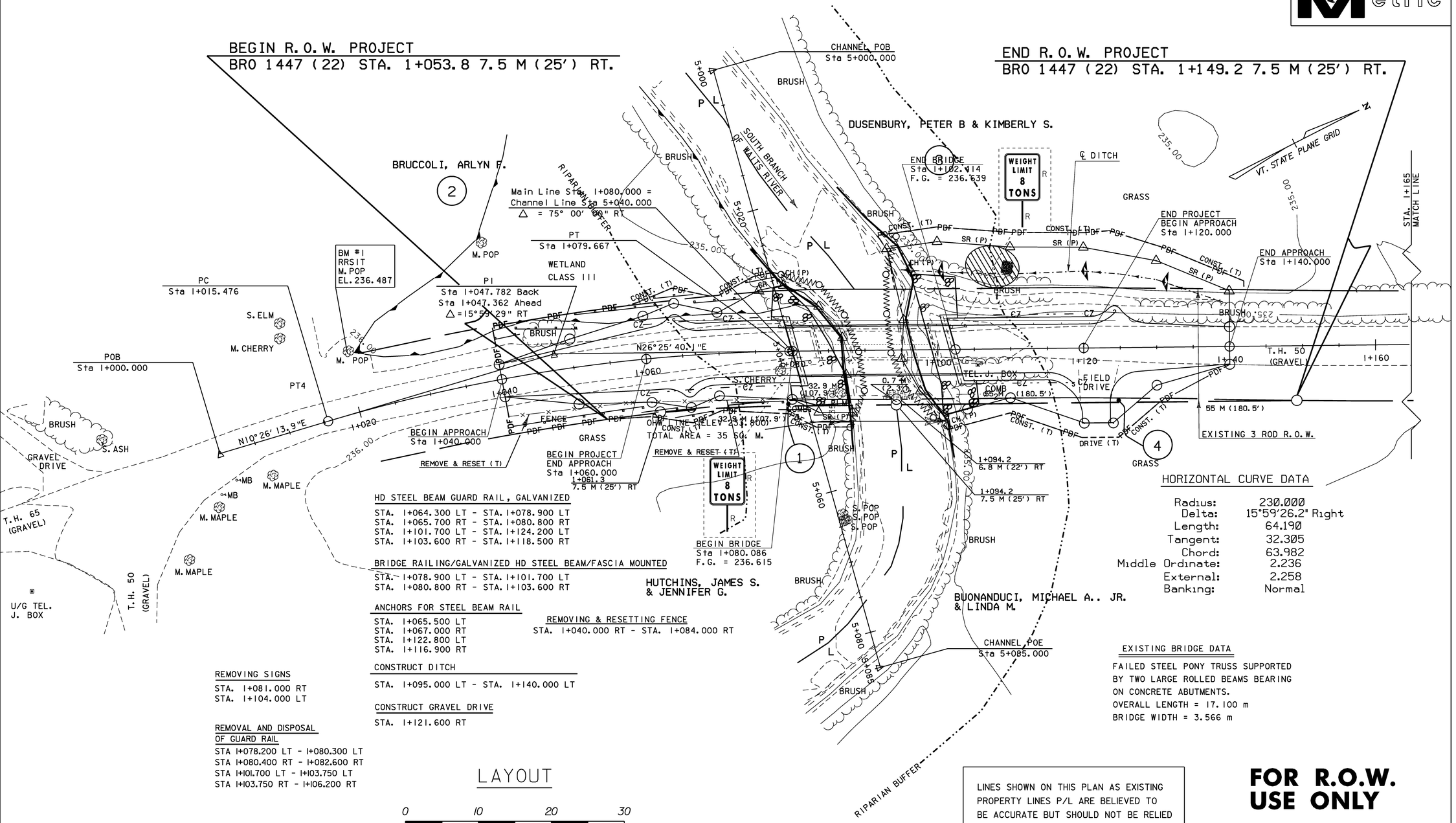

HORIZONTAL CURVE DATA

Radius:	230.000
Delta:	15°59'26.2" Right
Length:	64.190
Tangent:	32.305
Chord:	63.982
Middle Ordinate:	2.236
External:	2.258
Banking:	Normal

EXISTING BRIDGE DATA

FAILED STEEL PONY TRUSS SUPPORTED BY TWO LARGE ROLLED BEAMS BEARING ON CONCRETE ABUTMENTS.
OVERALL LENGTH = 17.100 m
BRIDGE WIDTH = 3.566 m

HD STEEL BEAM GUARD RAIL, GALVANIZED

STA. 1+064.300 LT - STA. 1+078.900 LT
STA. 1+065.700 RT - STA. 1+080.800 RT
STA. 1+101.700 LT - STA. 1+124.200 LT
STA. 1+103.600 RT - STA. 1+118.500 RT

BRIDGE RAILING/GALVANIZED HD STEEL BEAM/FASCIA MOUNTED

STA. 1+078.900 LT - STA. 1+101.700 LT
STA. 1+080.800 RT - STA. 1+103.600 RT

ANCHORS FOR STEEL BEAM RAIL

STA. 1+065.500 LT
STA. 1+067.000 RT
STA. 1+122.800 LT
STA. 1+116.900 RT

REMOVING & RESETTING FENCE

STA. 1+040.000 RT - STA. 1+084.000 RT

REMOVING SIGNS

STA. 1+081.000 RT
STA. 1+104.000 LT

REMOVAL AND DISPOSAL OF GUARD RAIL

STA 1+078.200 LT - 1+080.300 LT
STA 1+080.400 RT - 1+082.600 RT
STA 1+101.700 LT - 1+103.750 LT
STA 1+103.750 RT - 1+106.200 RT

CONSTRUCT DITCH

STA. 1+095.000 LT - STA. 1+140.000 LT

CONSTRUCT GRAVEL DRIVE

STA. 1+121.600 RT

LAYOUT

0 10 20 30
SCALE IN METERS

LINES SHOWN ON THIS PLAN AS EXISTING PROPERTY LINES P/L ARE BELIEVED TO BE ACCURATE BUT SHOULD NOT BE RELIED UPON FOR PURPOSES UNRELATED TO THE TOWN OF CORINTH'S ACQUISITION OF LAND AND RIGHTS FOR THIS PROJECT.

FOR R.O.W. USE ONLY

LEGEND
R - REMOVE
RET - RETAIN

DATUM
VERTICAL NAVD 88
HORIZONTAL NAD 83/92

PROJECT: CORINTH	PROJECT NO.: BRO 1447(22)
DESIGN FILE NAME: /prop/93J042/rJ042zzz.dgn	
IPARM FILE NAME: /prop/93J042/rJ042llr.I	PLOT DATE: 16-JUL-2008
SURVEYED BY: R.D. GILMAN	SURVEY DATE: 3-15-95
SQUAD LEADER:	DRAWN BY:
R.O.W. SHEET 9 OF 9 SHEETS	SHEET 34 OF 42

STATE OF VERMONT
AGENCY OF TRANSPORTATION
RIGHT OF WAY PLANS
DETAIL SHEET

TABLE OF PROJECT PROPERTY ACQUISITION

PARCEL NO.	GRANTOR	SHEET NO.	BEGINNING STATION	ENDING STATION	TAKING	REM.	RIGHTS	TITLE TAKEN	DATE	TOWN OR CITY RECORDED	BK.	PG.	REMARKS
1	HUTCHINS, JAMES S. & JENNIFER G.	9	1+061.3 RT.	1+094.2 RT.	23.9 SM±			WDOE	11-14-02	CORINTH	74	359-	258 SF±
			1+053.8 RT.	1+088.2 RT.			CONST. (T) 28.5 SM±					360	307 SF±
			1+060.0 RT.	1+088.2 RT.			REMOVE & RESET (T)						FENCE
			1+082.2 RT.	1+088.2 RT.			SLOPE (P) 5.0 SM±						54 SF±
2	BRUCCOLI, ARLYN F.	9	1+059.2 LT.	1+082.5 LT.			CONST. (T) 23.0 SM±	WDOE	08-26-02	CORINTH	74	1-2	250 SF±
			1+075.0 LT.	1+077.0 LT.			SLOPE (P) 0.5 SM±						5 SF±
			1+077.0 LT.	1+080.0 LT.			CHANNEL (P) 1.2 SM±						13 SF±
3	DUSENBURY, PETER B. &	9	1+092.0 LT.	1+142.0 LT.			CONST. (T) 104.0 SM±	WDOE	07-12-02	CORINTH	73	294-	1119 SF±
	KIMBERLY S.											295	
			1+093.2 LT.	1+140.0 LT.			SLOPE (P) 209.5 SM±						2255 SF±
													INCLUDES DETENTION BASIN
			1+096.5 LT.	1+102.8 LT.			CHANNEL (P) 10.8 SM±						116 SF±
4	BUONANDUCI, MICHAEL A., JR. &	9	1+094.2 RT.	1+149.2 RT.	30.7 SM±			WDOE	07-05-02	CORINTH	73	252-	331 SF±
	LINDA M.											253	
			1+098.5 RT.	1+130.6 RT.			CONST. (T) 58.0 SM±						624 SF±
			1+100.0 RT.	1+106.8 RT.			CHANNEL (P) 4.5 SM±						48 SF±
			1+121.6 RT.				DRIVE (T)						3.8M GRAVEL (12 FT)
5	TOPSHAM TELEPHONE COMPANY												UTILITY

REVISION NO.	SHEET	DESCRIPTION OF REVISION	DATE	MADE BY	APPROVED BY
1	8,9	PARCEL NO. 3 SLACK. CHANGE OWNER TO PETER B. & KIMBERLY DUSENBURY. PER C.O. 9185.	01-25-01	T.B.F.	R.P.D.
2	8,9	PARCEL NO. 2 PACILIO. CHANGE OWNER TO ARLYN F. BRUCCOLI. PER C.O. 9233.	04-24-02	G.J.F.	E.G.P.
		ELECTRONIC FILES TO STRUCTURES 11-7-07			

DR.(P)- DRAINAGE RIGHT
DIT.(P)- DITCHING RIGHT
CH.(P)- CHANNEL RT.
DRIVE (T)- DRIVE RIGHT
CUL.(P)- CULVERT RIGHT
W - WATER SOURCES

PRESENT R.O.W.
TAKING WITHOUT ACCESS
TAKING WITHOUT ACCESS ALONG PROPERTY LINE
TAKING WITH ACCESS
(P) PERMANENT EASEMENT
(T) TEMPORARY EASEMENT

LEGEND
C&T (P) CLEARING & TRIMMING
CZ (P) CLEAR ZONE
CONST.(T) CONSTRUCTION EASEMENT
SR SR SLOPE RIGHTS
P L PROPERTY LINE
TOP OF CUT
TOE OF SLOPE
UE (P) PERMANENT UTILITY EASEMENT

APPROVED: LAWRENCE W. BLISS DATE: 01-11-99
CHIEF, PLANS & TITLES

R.O.W. PLANS
CORINTH
BRO 1447(22)
R.O.W. SHEET 8 OF 9 SHEETS
SHEET 35 OF 42

ACCT.dbeard
M:\Projects\93J042\RightOfWay\rJ042d.dgn
DATE PLOTTED 16-JUL-2008

Metric

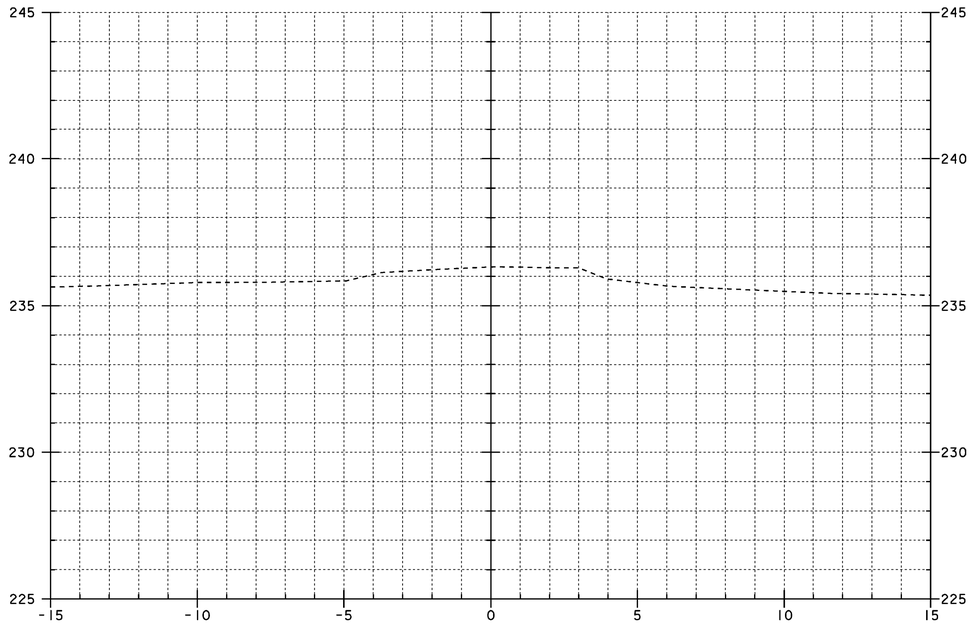

1+030

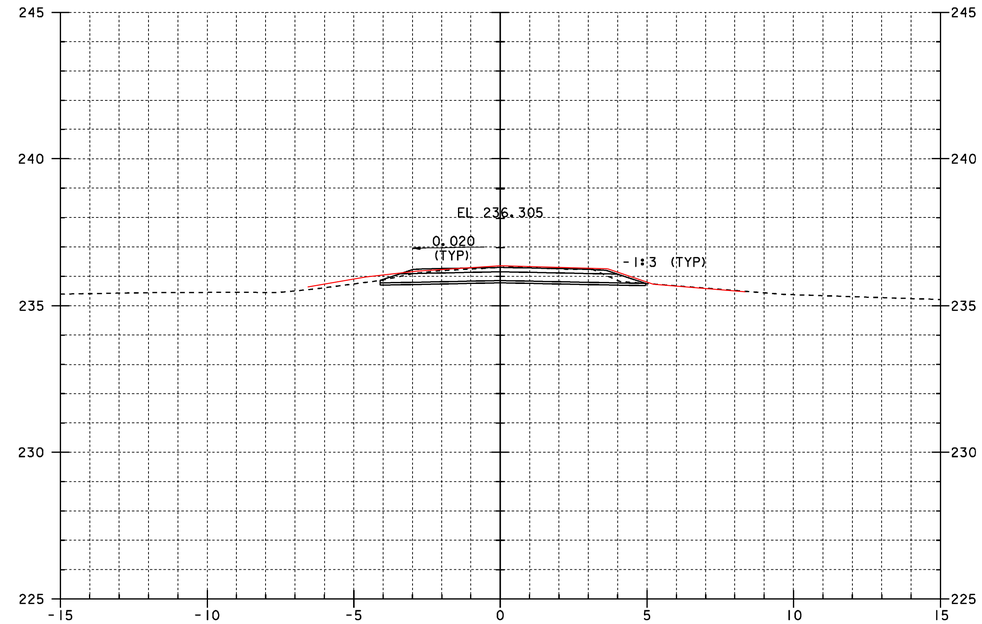

1+050

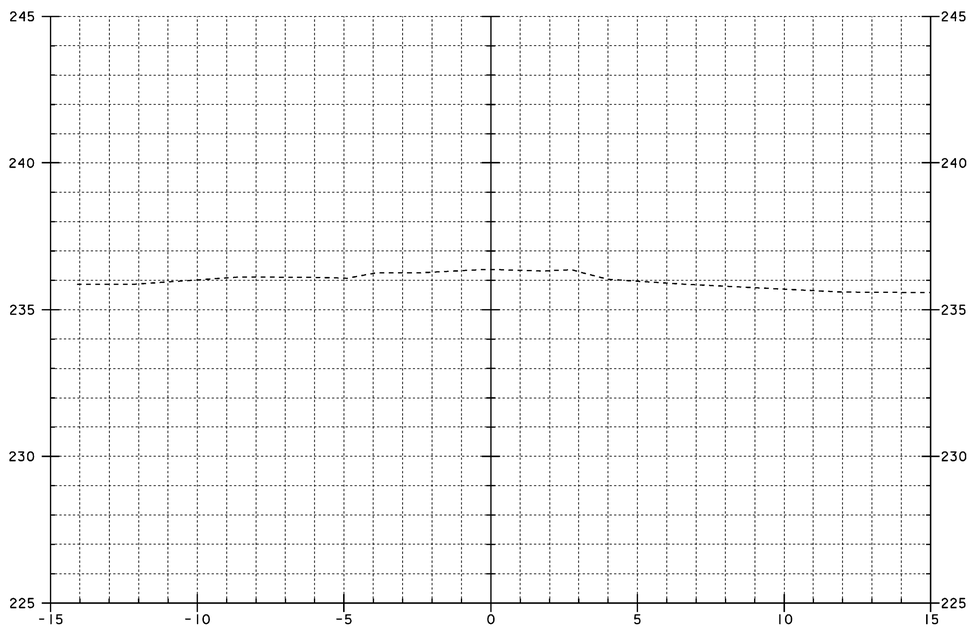

1+020

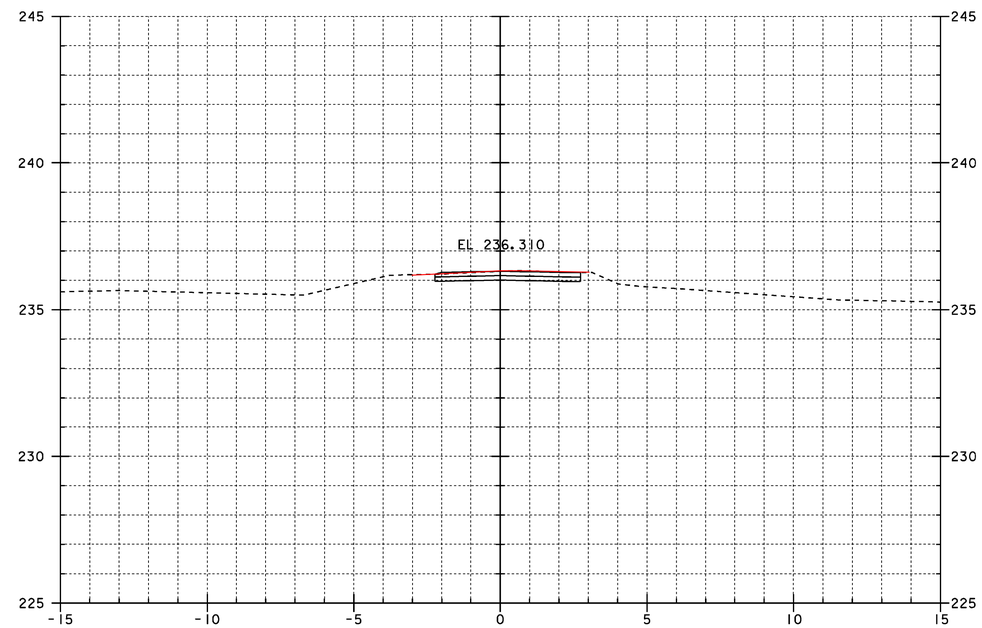

1+040

STA. 1+040.000 BEGIN APPROACH
MATCH EXISTING

0 2 4 6 8 10
SCALE 1:100

PROJECT: CORINTH	PROJECT NO.: STP BRO 1447 (22) (RE-ADVERTISED)
DESIGN FILE NAME: sj042xs2.dgn IPARM FILE NAME: sj042ml.i	PLOT DATE: 16-JUL-2008
MAIN LINE SECTIONS	
1+020 TO 1+050	SHEET: 36 OF 42

Metric

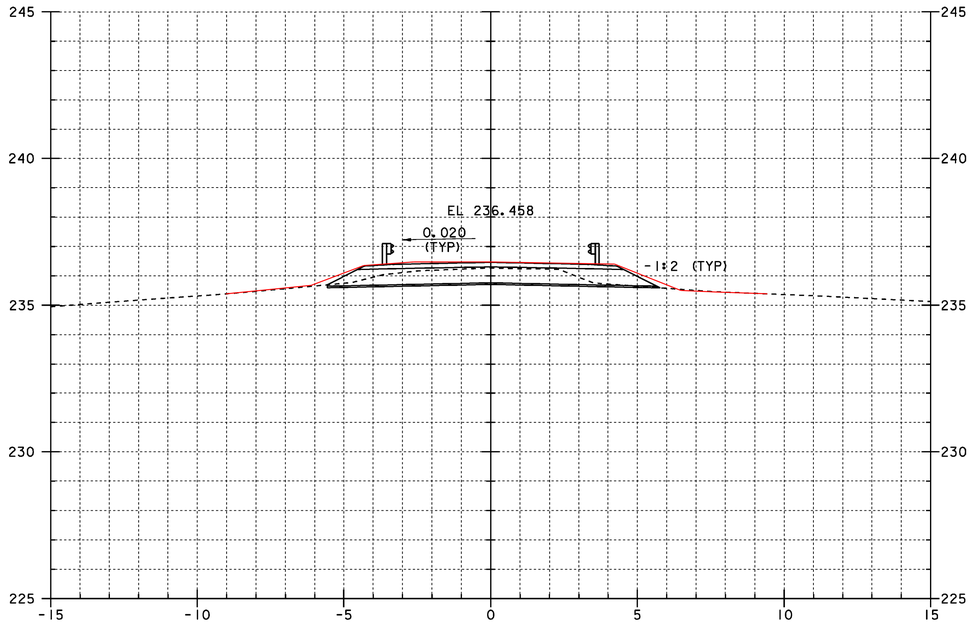

1+070

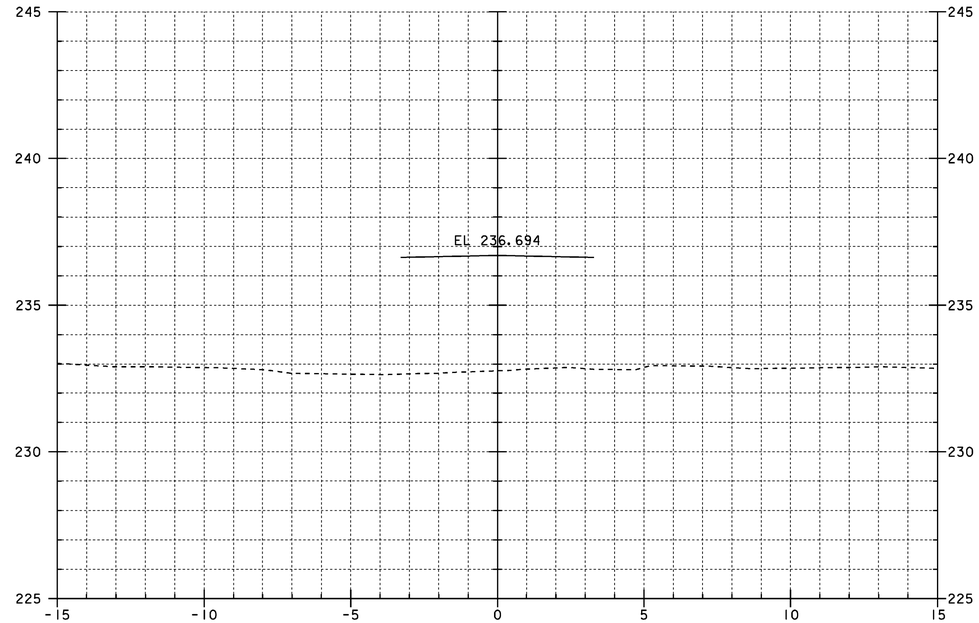

1+090

STA. 1+080.086
BEGIN BRIDGE

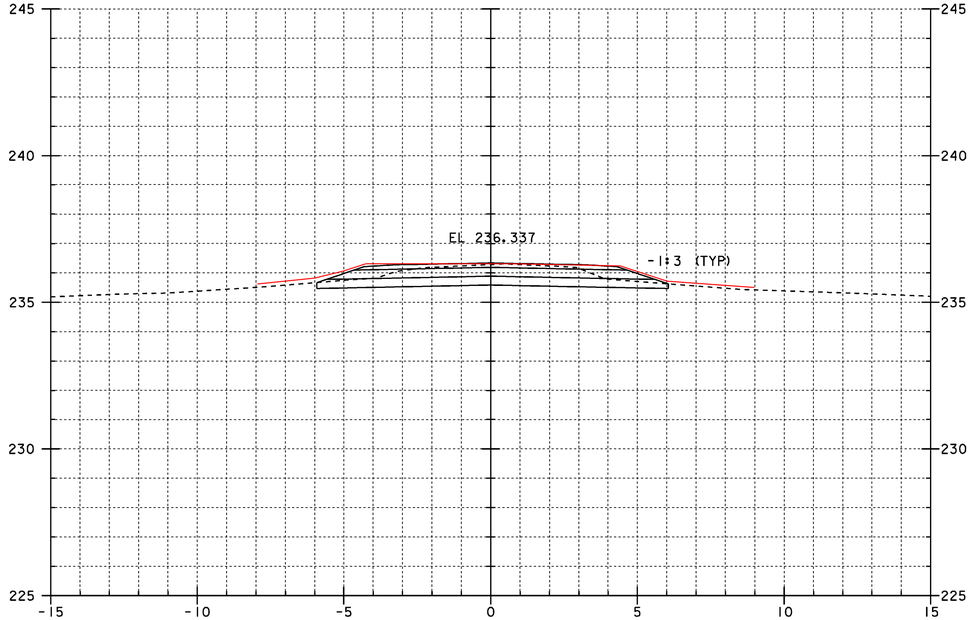

1+060

STA. 1+060.000
END APPROACH
BEGIN PROJECT

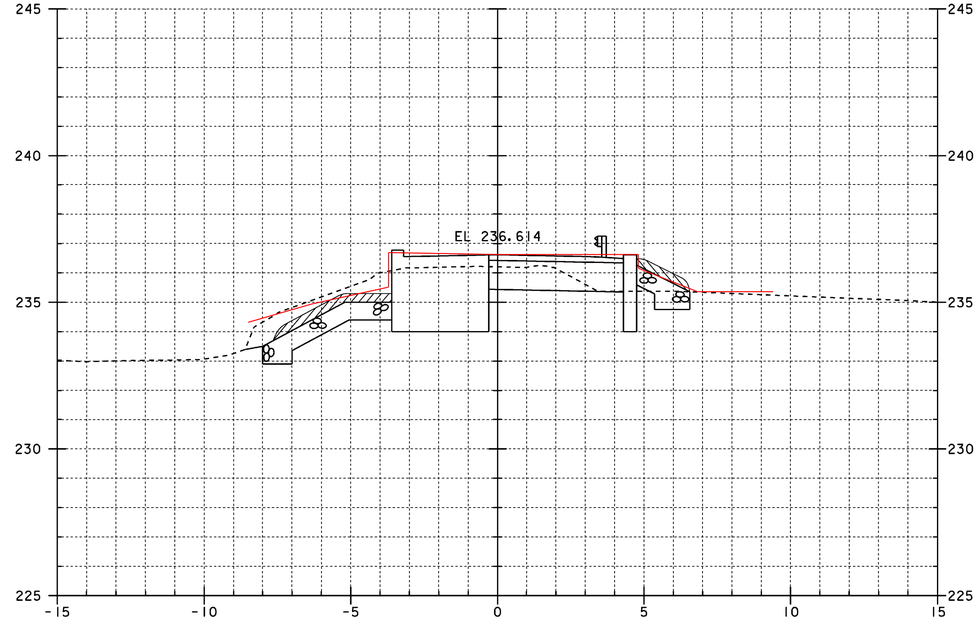

1+080

0 2 4 6 8 10
SCALE 1:100

PROJECT: CORINTH	PROJECT NO.: STP BRO 1447 (22) (RE-ADVERTISED)
DESIGN FILE NAME: sj042xs2.dgn IPARM FILE NAME: sj042m2.i	PLOT DATE: 16-JUL-2008
MAIN LINE SECTIONS	
1+060 TO 1+090	SHEET: 37 OF 42

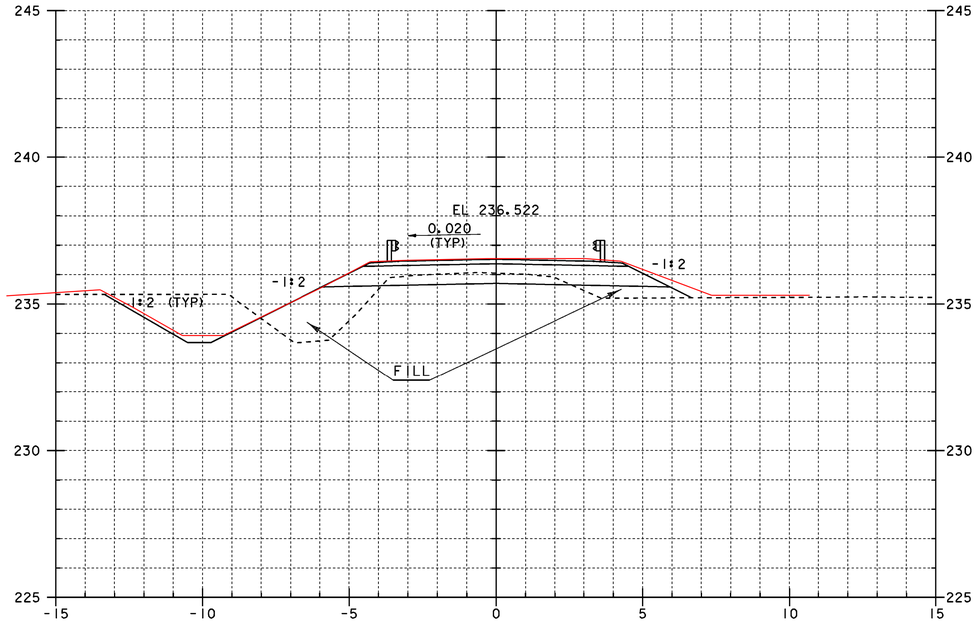

1+110

STA. 1+102.414
END BRIDGE

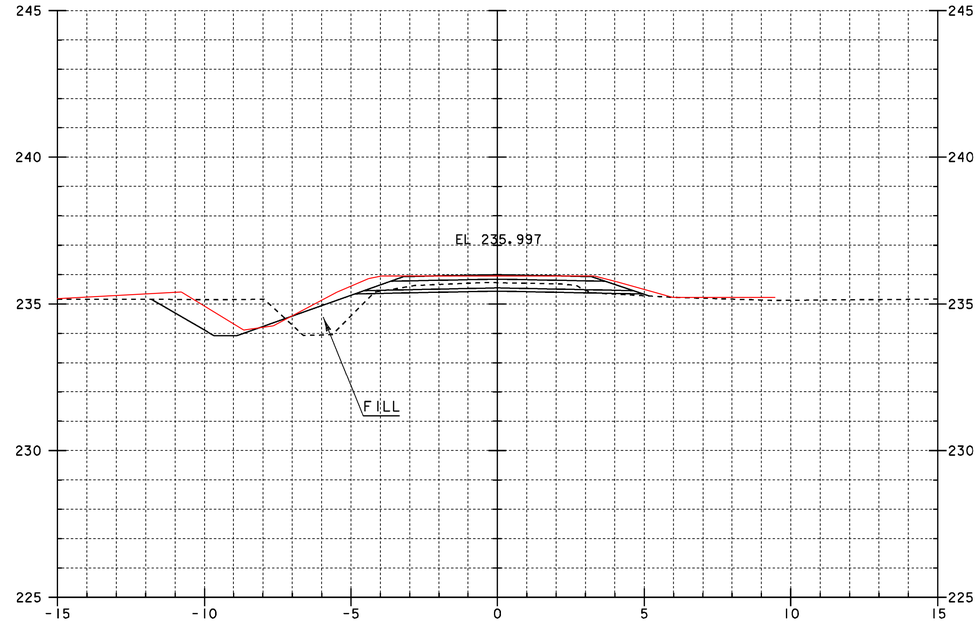

1+130

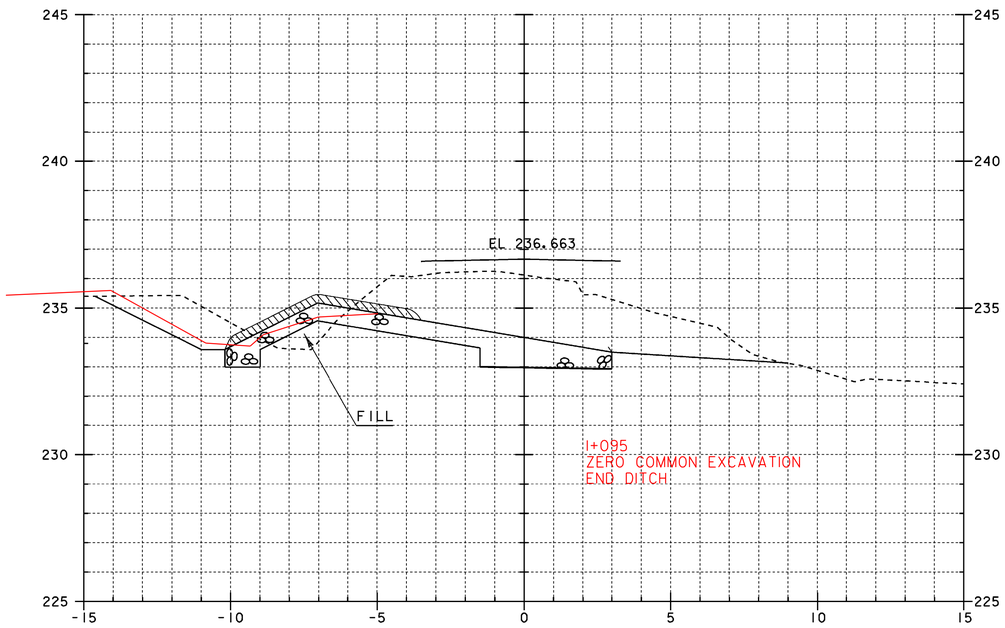

1+100

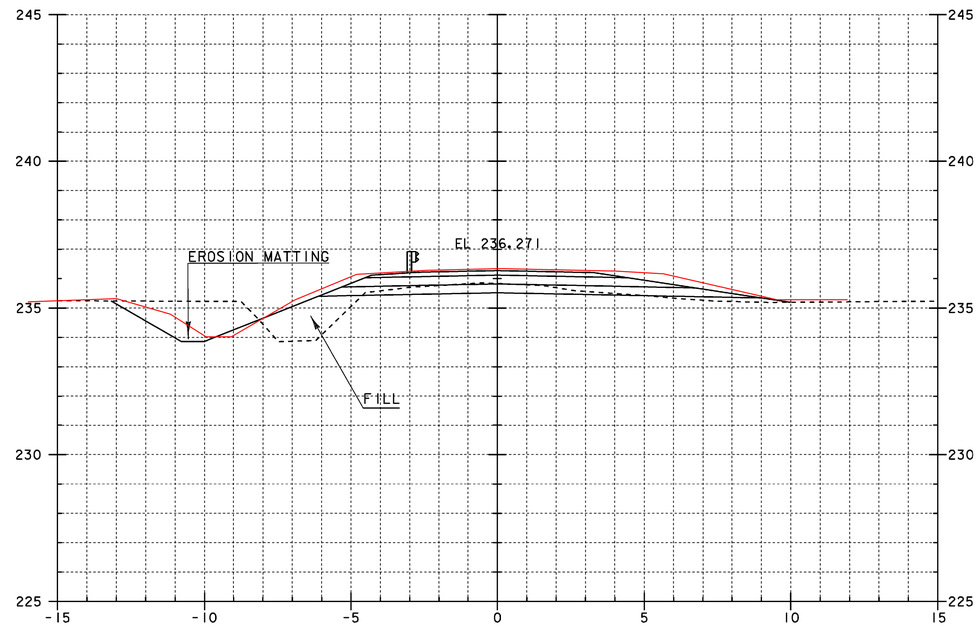

1+120

STA. 1+120.000
END PROJECT
BEGIN APPROACH

0 2 4 6 8 10
SCALE 1:100

PROJECT: CORINTH	PROJECT NO.: STP BRO 1447 (22) (RE-ADVERTISED)
DESIGN FILE NAME: sj042xs2.dgn IPARM FILE NAME: sj042m3.i	PLOT DATE: 16-JUL-2008
MAIN LINE SECTIONS	
1+100 TO 1+130	SHEET: 38 OF 42

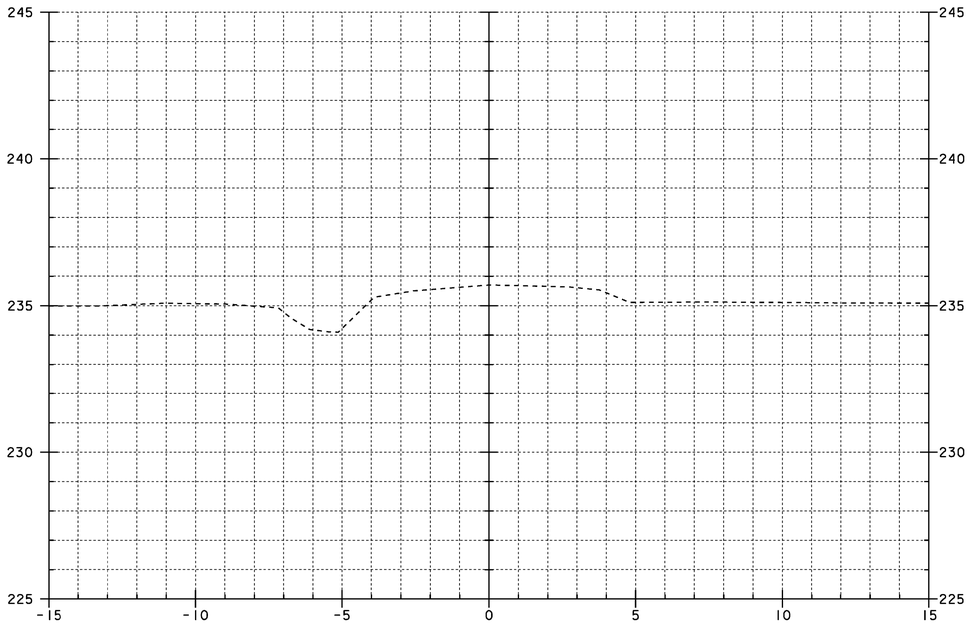

1+150

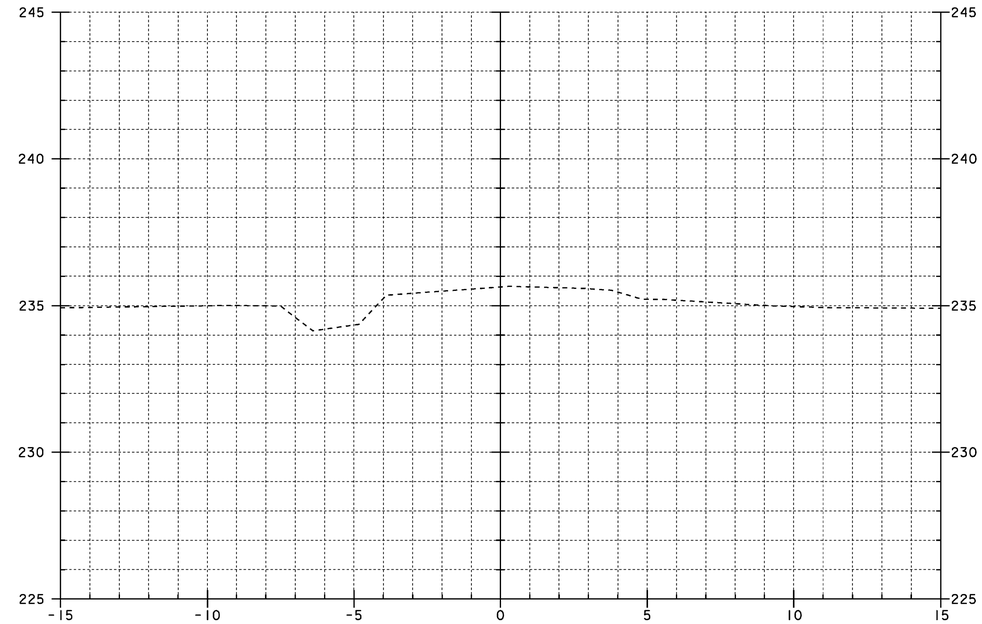

1+170

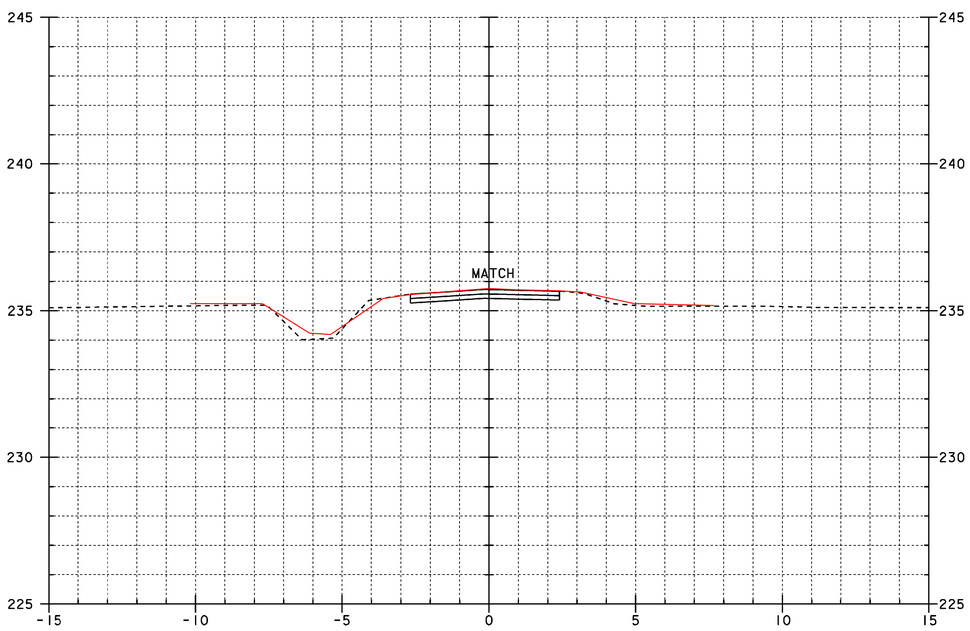

1+140

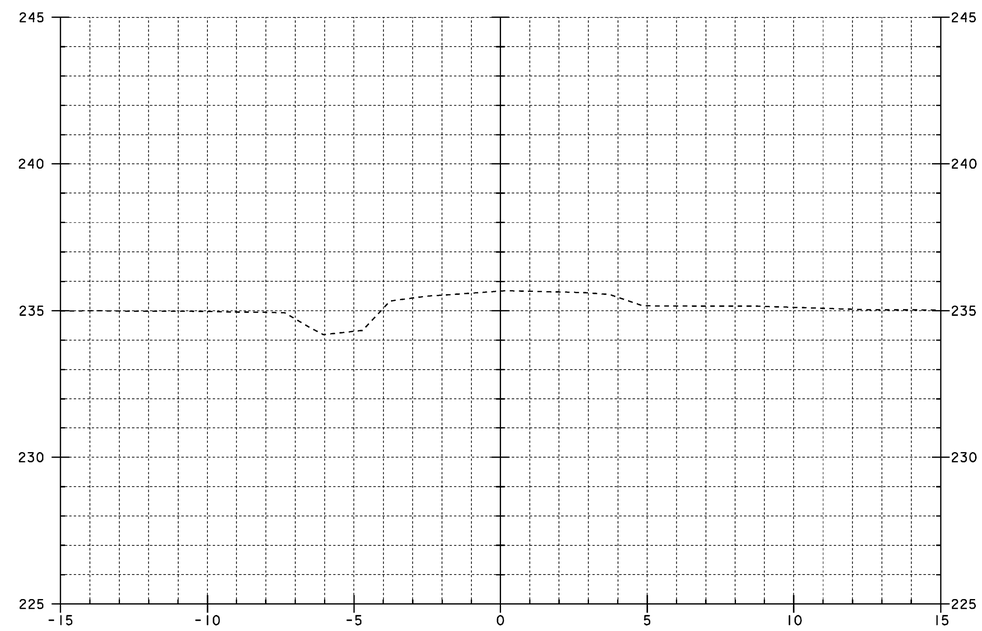

1+160

STA. 1+140.000 END APPROACH
END EROSION MATTING

0 2 4 6 8 10
SCALE 1:100

PROJECT: CORINTH	PROJECT NO.: STP BRO 1447 (22) (RE-ADVERTISED)
DESIGN FILE NAME: sj042xs2.dgn IPARM FILE NAME: sj042m4.i	PLOT DATE: 16-JUL-2008
MAIN LINE SECTIONS	
1+140 TO 1+170	SHEET: 39 OF 42

Metric

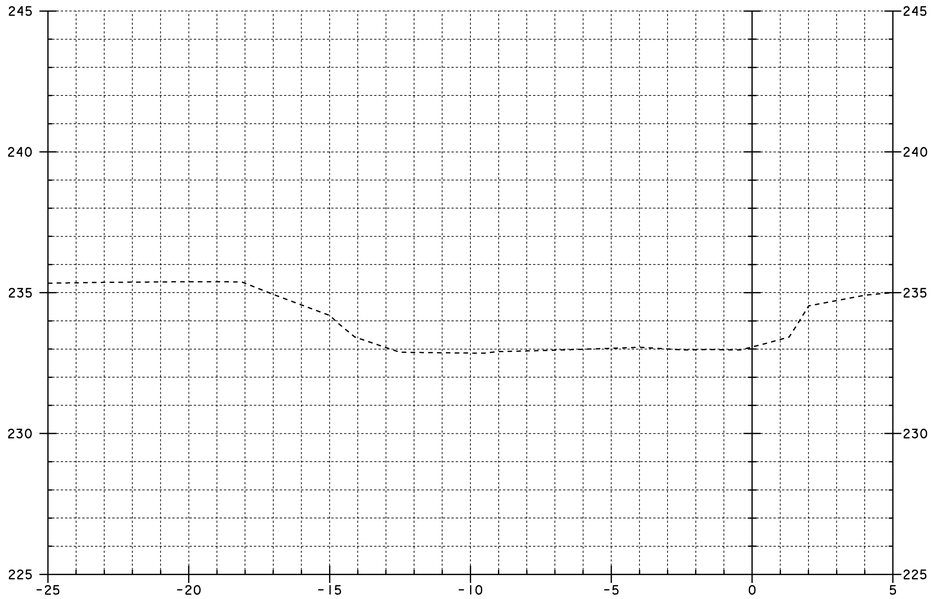

5+025

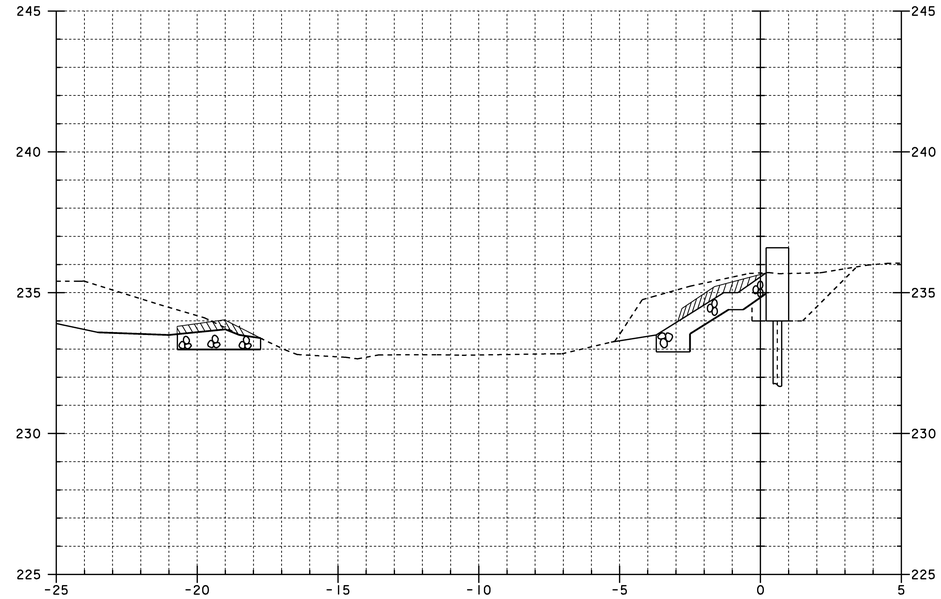

5+035

STA. 5+034.000 FAR LEFT

BEGIN STONE FILL TYPE II
BEGIN GRUBBING MATERIAL
BEGIN GEOTEXTILE UNDER STONE FILLL
BEGIN UNCLASSIFIED CHANNEL EXCAVATION

STA. 5+031.000 LEFT

BEGIN STONE FILL TYPE II
BEGIN GRUBBING MATERIAL
BEGIN GEOTEXTILE UNDER STONE FILLL
BEGIN UNCLASSIFIED CHANNEL EXCAVATION

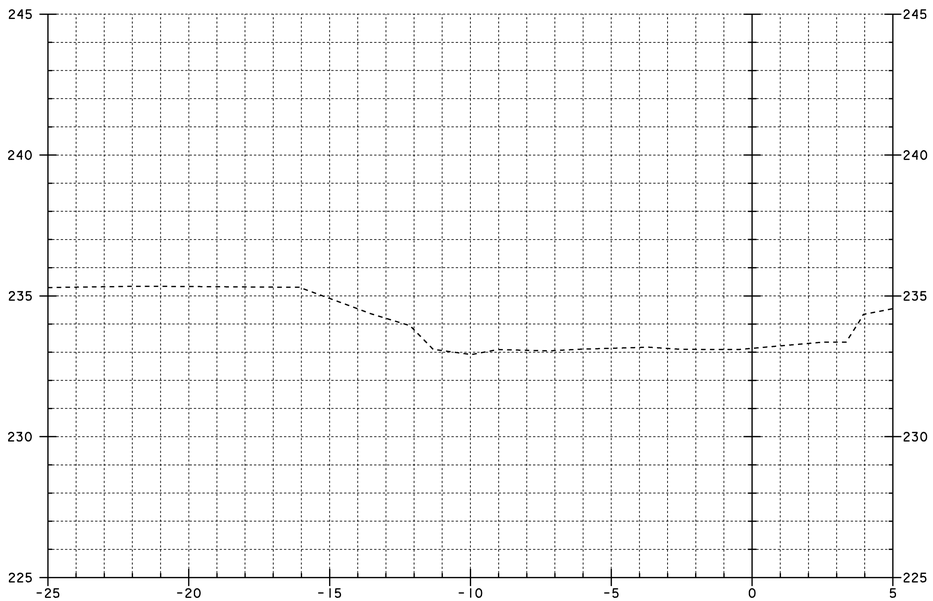

5+020

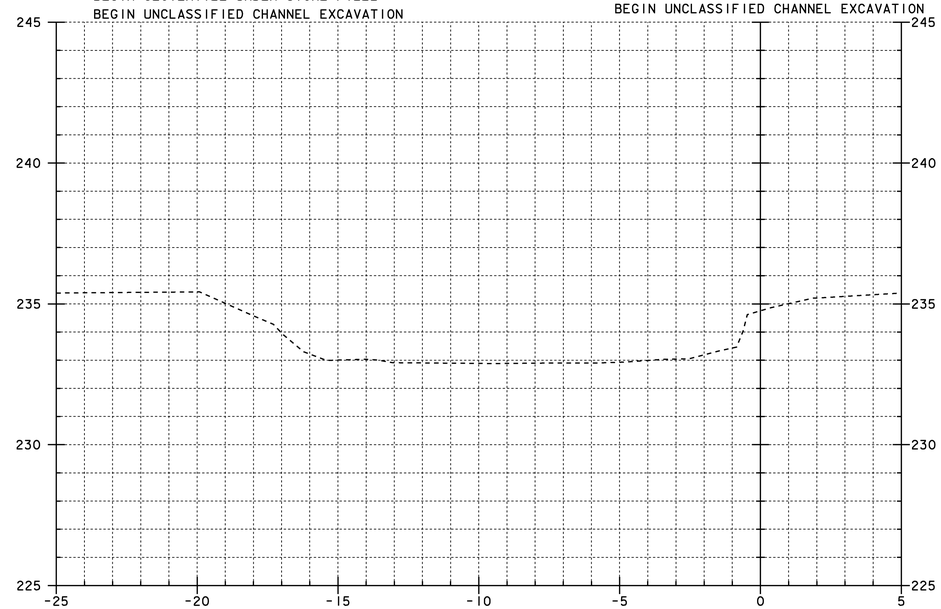

5+030

0 2 4 6 8 10
SCALE 1:100

PROJECT: CORINTH	PROJECT NO.: STP BRO 1447 (22) (RE-ADVERTISED)
DESIGN FILE NAME: sj042xs2.dgn IPARM FILE NAME: sj042c2.i	PLOT DATE: 16-JUL-2008
CHANNEL LINE SECTIONS	
5+020 TO 5+035	SHEET: 40 OF 42

Metric

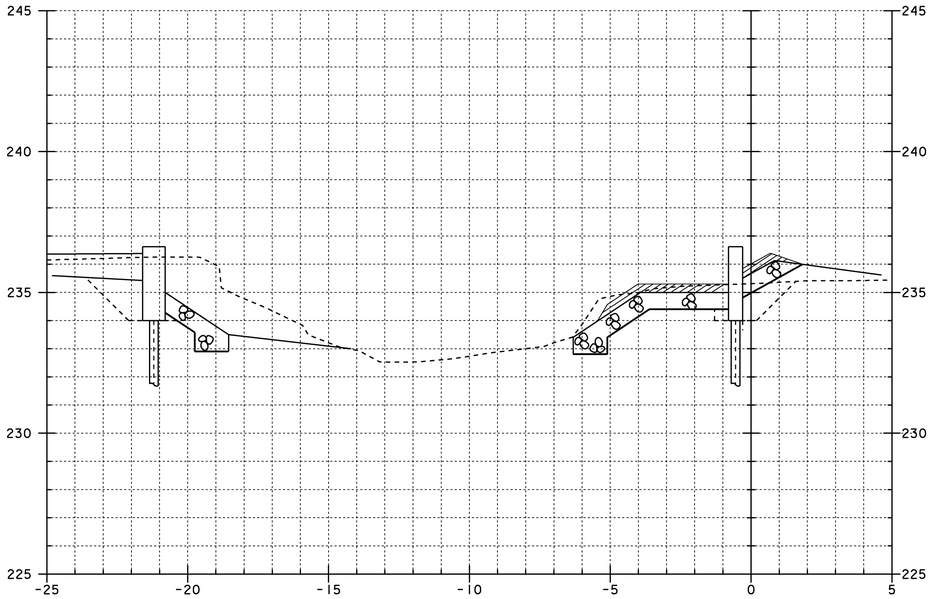

5+045

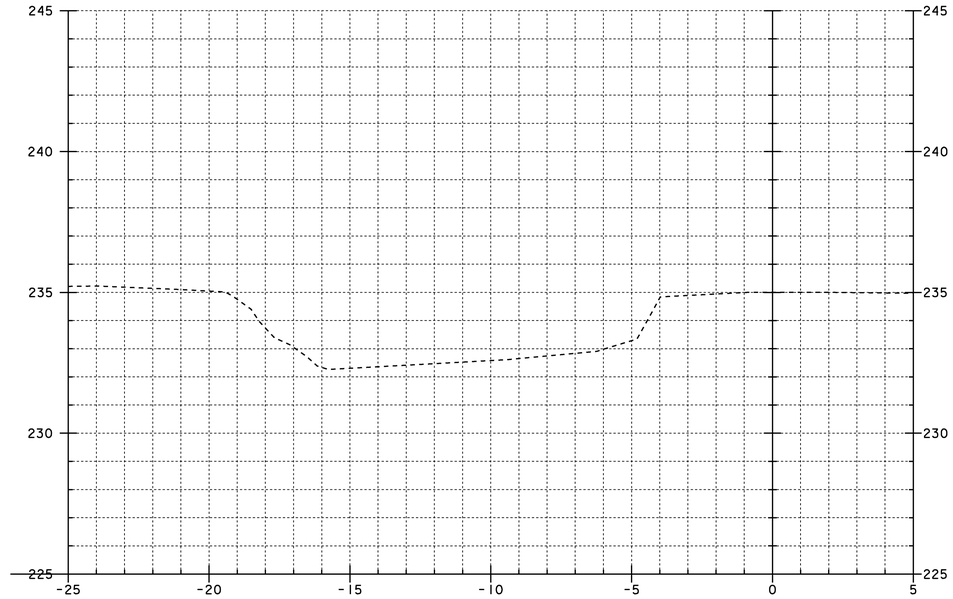

STA. 5+054.000 FAR LEFT 5+055

END STONE FILL TYPE II
END GRUBBING MATERIAL
END GEOTEXTILE UNDER STONE FILLL
END UNCLASSIFIED CHANNEL EXCAVATION

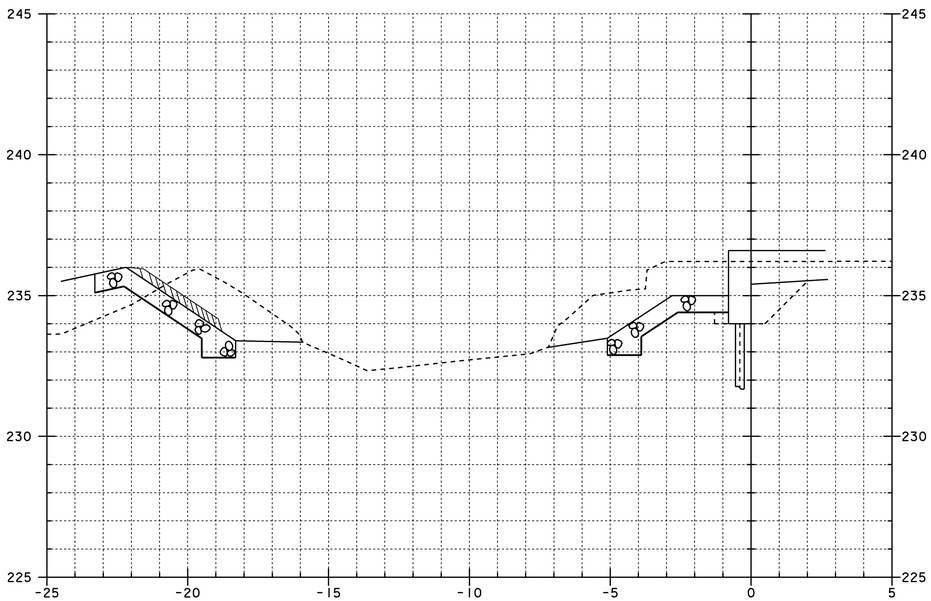

5+040

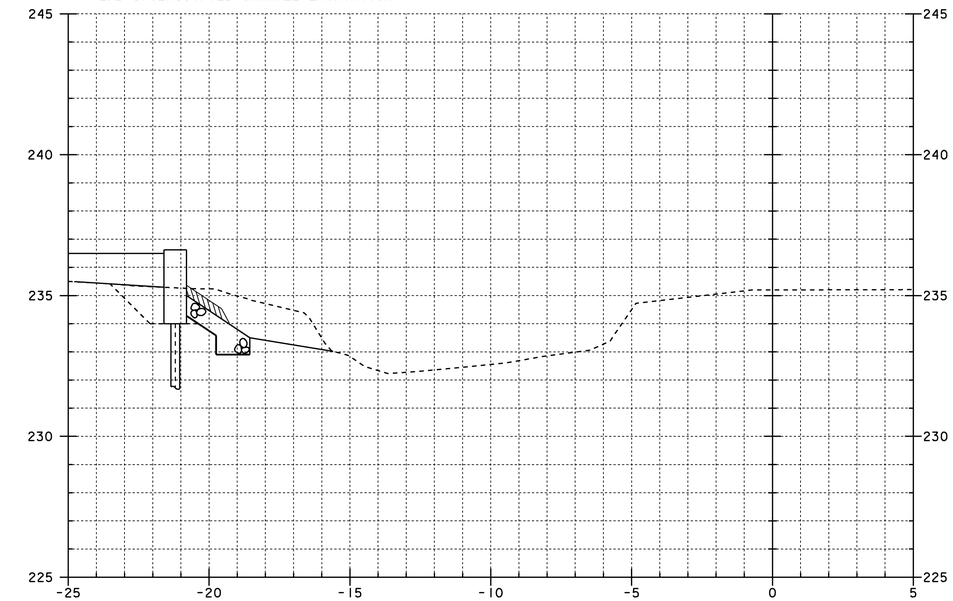

5+050

STA. 5+ 049.000 LEFT

END STONE FILL TYPE II
END GRUBBING MATERIAL
END GEOTEXTILE UNDER STONE FILLL
END UNCLASSIFIED CHANNEL EXCAVATION

0 2 4 6 8 10
SCALE 1:100

PROJECT: CORINTH	PROJECT NO.: STP BRO 1447 (22) (RE-ADVERTISED)
DESIGN FILE NAME: sj042xs2.dgn IPARM FILE NAME: sj042c3.i	PLOT DATE: 16-JUL-2008
CHANNEL LINE SECTIONS	
5+040 TO 5+055	SHEET: 41 OF 42

Metric

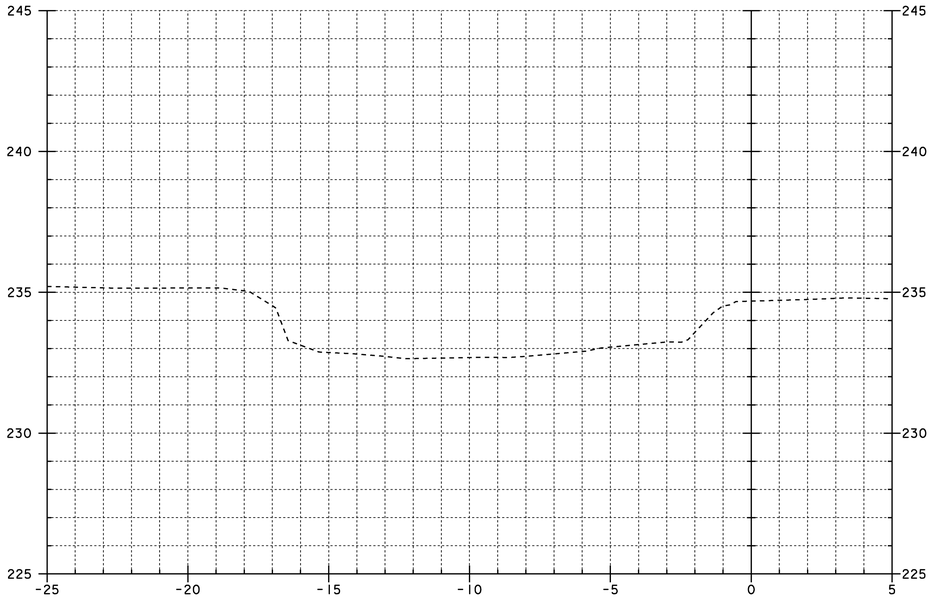

5+065

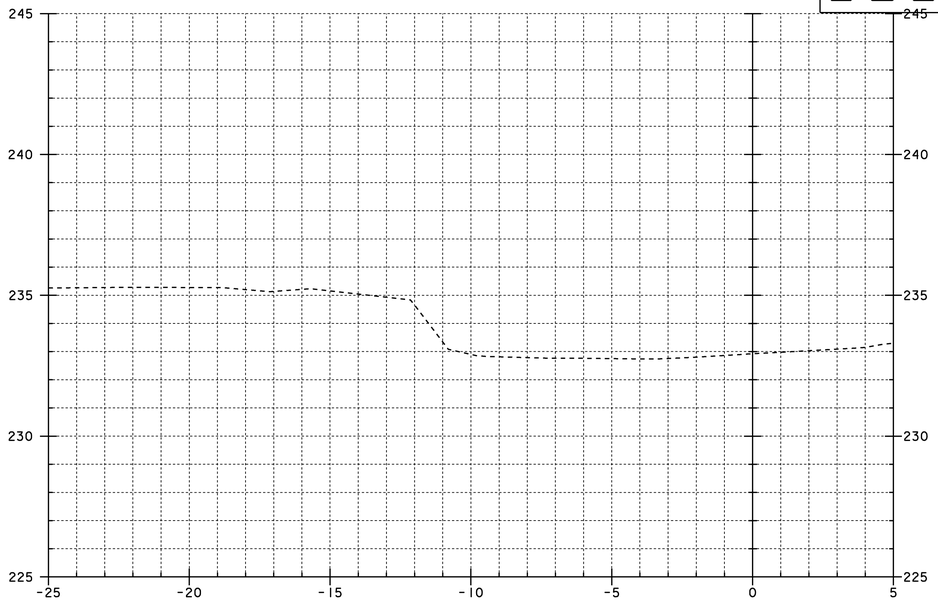

5+075

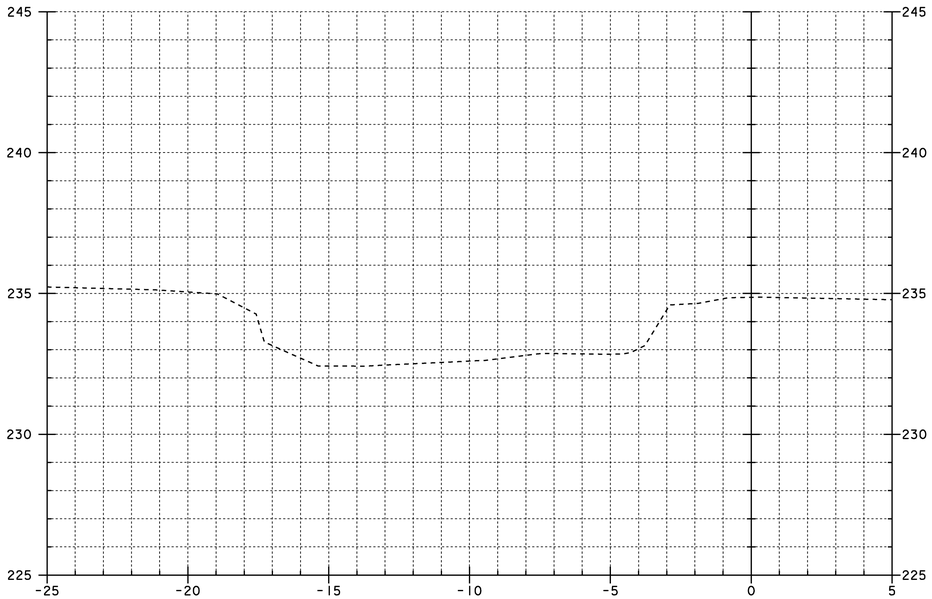

5+060

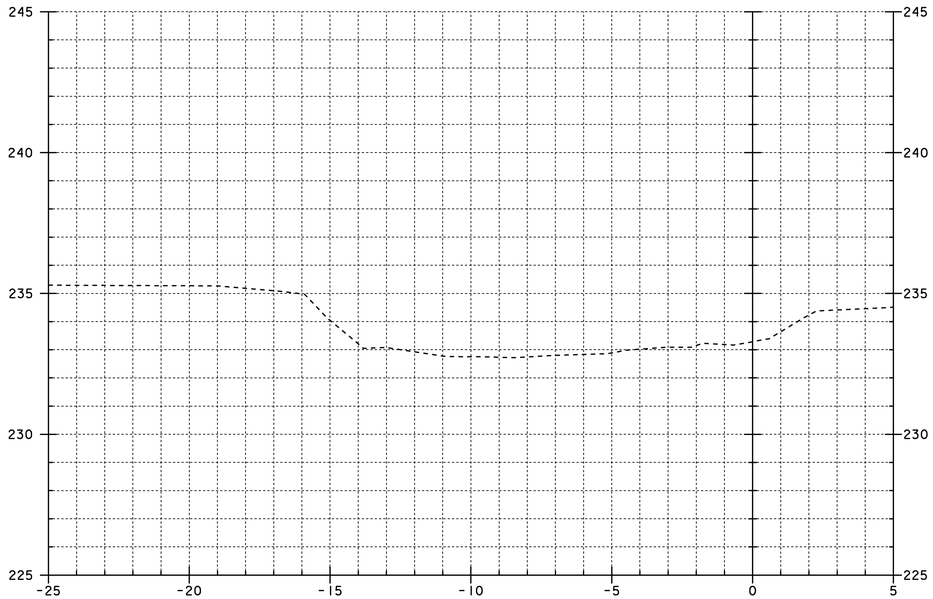

5+070

0 2 4 6 8 10

SCALE 1:100

PROJECT: CORINTH	PROJECT NO.: STP BRO 1447 (22) (RE-ADVERTISED)
DESIGN FILE NAME: sj042xs2.dgn IPARM FILE NAME: sj042c4.I	PLOT DATE: 16-JUL-2008
CHANNEL LINE SECTIONS	
5+060 TO 5+075	SHEET: 42 OF 42

Casco Bay Steel Structures, Inc.

5 Industry Road
South Portland, Maine 04106

one: (207) 772-2533 Fax: (207) 772-0580

WELDING PROCEDURE SPECIFICATION

Material specification: ASTM A709-Gr 36-50-50W (250-345-345W)
Welding process: Shielded Metal Arc welding (SMAW)
Manual or machine: Manual
Position of welding: Flat (1F) Horizontal (2F)
Filler metal specification: AWS/AWS A5.1 - A5.5
Filler metal classification: E7018 - 8018 E7018 - 7028
Flux: NA
Shielding gas: NA Flow rate: NA
Single or multiple pass: Single and multiple
Single or multiple arc: Single
Welding current: AC / DC
Polarity: Straight / Reverse
Welding progression:
Root treatment: Meet AWS specification
Preheat and interpass temperature: To 3/16(4.8) 50°(10°) 3/16(4.8) To 1 1/4(31.8) 70°(20°) 1 1/2(38) To 2 1/2(63.5) 150°(65°) over 2 1/2(63.5) 225°(110°)
Postheat temperature: NA
Heat Input Min: NA Max: NA

VT. ACT Gorinth
Br #94 - Proj # STR8R0-1447(30)
CBSS no 388

DRAWN BY: JCL
CHKD BY:
RECEIVED NOV 21 2008
APPROVED: V.
DATE: 11/24/08

(metric)

WELDING PROCEDURE

Pass no.	Electrode size	Welding current: Amperes	Welding current: Volts	Travel speed
AS. REQ.	7018 1/8 (3.2)	70-170	22-26	AS REQ
	5/32 (3.9)	120-225	22-26	
	3/16 (4.8)	190-300	24-27	
	8018 1/8 (3.2)	90-160	22-26	
	5/32 (3.9)	120-225	22-26	
	3/16 (4.8)	180-290	24-27	
	7028 5/32 (3.9)	190-290	22-26	
	3/16 (4.8)	210-330	24-27	

AWS D1.5 Joint detail: Fillet

1F

2F

This procedure may vary due to fundation sequence, fit-up, pass size, etc., within the limitation of variables given in applicable codes or contract specifications

Procedure no. 401
Revision no.
Form III-2

Contractor: Casco Bay Steel
Authorized By: Paul E. Hoodale
Date: 3/2/00

04355

Casco Bay Steel Structures, Inc.

75 Spring Hill Road
Saco, Maine 04072

Phone: (207) 282-7360 Fax: (207) 282-1179

WELDING PROCEDURE SPECIFICATION

Material specification ASTM A709/A709M (Gr 36 (250) -50(345) -50W(345W))
Welding process Flux Cored Arc welding
Manual or machine Semi-Auto
Position of welding Flat (1F) - Horizontal (2F)
Filler metal specification AWS-A5-29
Filler metal classification E81T1-Ni
Flux NA
Shielding gas 75% AR / 25% CO^2 Flow rate 35 CFH ±8.6
Single or multiple pass Single and Multiple
Single or multiple arc Single
Welding current Direct
Polarity Reverse Electrode Positive
Welding progression
Root treatment To Meet AWS D1.5 Specification
Preheat and interpass temperature To 3/4(19) 50° (10°) - 3/4" (19) To 1½" 70° (21°) 1½" (38) To 2½" (64) 150° (65°)
Postheat temperature NA Over 2½" (64) 225° (110°)
Heat Input Min 28.6 (1.1 KJ/mm) Max 40.0 (1.8 KJ/mm) P.Q.R. #2 = 40.9 (1.1 KJ/mm)

VT ACT Corinth
Br#34 - Proj#STR.BRO-144N(30)
C.B.S.S No 3860

(Metric) WELDING PROCEDURE

Pass no.	Electrode size	Welding current Amperes	Welding current Volts	Travel speed	AWS D1.5 Joint detail Fillet
AS Req	1/16	275	28.8	11.6	1F
		247 To 302.5	26.8 To 30.8	10.4 To 12.8	To ½ (12.7)
	(Metric) 1.6	275	28.8	294.6	2F
		247 To 302.5	26.8 To 30.8	264.2 To 325.12	To 3/8 (9.5)

VTRANS RECEIVED NOV 24 2008 CKD BY Jek APPROVED ✓ DATE 11/24/08

This procedure may vary due to fabrication sequence, fit-up, pass size, etc., within the limitation of variables given in applicable A.W.S. codes or contract specifications

Procedure no. 101-A
Revision no. 1
Form III-2

Contractor Casco Bay Steel
Authorized by Duane E. Goodall
Date 2007

11/24/2008 10:35 FAX 2072821179 CASCO BAY STEEL 003

Casco Bay Steel Structures, Inc.

75 Spring Hill Road
Saco, Maine 04072

Phone: (207) 282-7360

Fax: (207) 282-1179

WELDING PROCEDURE SPECIFICATION

Material specification ASTM-709/A709M - Gr 36 (250), 50 (345), 50W (345W)
Welding process Submerged Arc Welding
Manual or machine Machine
Position of welding Horizontal (2F)
Filler metal specification AWS A5-23
Filler metal classification F8A2-EA1K-N1 Lincoln
Flux Lincoln 960 FLUX WITH LA-75 Electrode
Shielding gas N/A Flow rate N/A
Single or multiple pass Single - Electrode Ex 1 3/4 (25.4 ± 19.1)
Single or multiple arc Single
Welding current DC
Polarity DCEN
Welding progression See Joint detail
Root treatment AWS - Spec. - wire brush - grind - Blast (Clean grade
Preheat and interpass temperature Ie 3/4 (19) - 50° (10°) - 3/8" (19) to 1 1/2 (38) 70° (20) - 1 1/2 (38) to 2 1/2 (63) 150° (65°)
over 2 1/2 (63) - 225° (110°)
Postheat temperature N/A
Heat Input Min 3.6 KJ/in (1.2 KJ/mm) Max 4.7 KJ/in (1.9 KJ/mm) PQR #4-428 KJ/in (1.7 KJ/mm)

(Metric)

WELDING PROCEDURE

VT ACT Corinth
Br #34 - Proj #STAPRO-1447(32)
C 655 MO 3 80
AWS D1-5

Pass no.	Electrode size	Welding current Amperes	Welding current Volts	Travel speed	Fillet
1	3/32	299	31	13 IPM	2F
		269 To 329	29 To 33	11 To 15	
	2.4	Metric 299	31	330 mm	
		269 To 329	29 To 33	279 To 381	

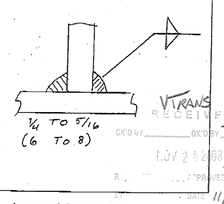

VTRANS RECEIVED
CK'D BY ____ OK'D BY JCK
NOV 24 2008
R ____ APPROVED ✓
11/24/08

This procedure may vary due to fabrication sequence, fit-up, pass size, etc., within the limitation of variables given in applicable A.W.S. codes or contract specifications

Procedure no. 250
Revision no. ____
Form III-2

Approved QC 1 Paul E Goodale 6/13/2001 COPY

Contractor Casco Bay Steel
Authorized By Paul E Goodale
Date 6-13-00

GENERAL NOTES

CONSTRUCTION SPECIFICATIONS

1). ALL MATERIAL AND WORKMANSHIP TO BE IN ACCORDANCE WITH THE STATE OF VERMONT AGENCY OF TRANSPORTATION STANDARD SPECIFICATIONS FOR CONSTRUCTION DATED 2006 WITH LATEST REVISIONS AND THE AASHTO LRFD BRIDGE CONSTRUCTION SPECIFICATIONS FOR HIGHWAY BRIDGES DATED 1998 AND ITS LATEST REVISIONS.

MATERIAL SPECIFICATIONS

1). UNLESS OTHERWISE NOTED, ALL STEEL TO BE AASHTO M270M (ASTM A709M) GRADE 345W.

2). MATERIAL NOTED "CVN" OR "H2-3" ON DETAIL DRAWINGS SHALL BE CHARPY V-NOTCH TESTED IN ACCORDANCE WITH THE REQUIREMENTS OF VERMONT STANDARD SPECIFICATIONS SECTION 714.01.

3). HIGH STRENGTH BOLTS: 22 ~~7/8~~"Ø ASTM A325 (AASHTO M164) TYPE 3 IN 24 ~~15/16~~"Ø HOLES.
NUTS SHALL BE A563 (AASHTO M291) GRADE C3.
BOLTS & NUTS SHALL BE ROTATIONAL CAPACITY TESTED.
DO NOT MIX NUTS & BOLTS FROM DIFFERENT CONTAINERS UNLESS ALL BOLTS & NUTS HAVE THE SAME LOT NUMBER.

FABRICATION

1). ALL HOLES SHALL BE PUNCHED OR DRILLED FULL SIZE (UN).

WELDING

1). THE CONFIGURATION OF THE WELD JOINTS AND ALL WELDING PROCEDURES SHALL BE IN ACCORDANCE WITH AASHTO/AWS D1.5-02 BRIDGE WELDING CODE AND IN ADDITION TO SPECIFICATIONS SHOWN ABOVE. ALL WELDING WILL BE DETAILED TO PRE-QUALIFIED JOINTS, UNLESS PROHIBITED BY THE DESIGNER.

2). WELDING OF MAIN LOAD CARRYING MEMBERS AND ATTACHMENTS SHALL BE PERFORMED USING THE AUTOMATIC SUBMERGED ARC & SHIELDED METAL ARC PROCESSES. ALL WELDS ARE CONTINUOUS U.N.

3). NON DESTRUCTIVE TESTING OF WELDS SHALL BE IN ACCORDANCE WITH THE REFERENCED SPECIFICATION.

4). SEE DETAIL "WS1" ON THIS DRAWING FOR WELD TERMINATION DETAIL.

CLEANING

1. ALL STEEL SHALL BE BLAST CLEANED IN ACCORDANCE WITH SSPC SP-~~8~~ 10.
2. STRUCTURAL STEEL SHALL NOT BE PAINTED.

FIELD CONNECTIONS

1). ALL FIELD CONNECTIONS SHALL BE MADE WITH 22 ~~7/8~~" DIAMETER HIGH STRENGTH A-325 TYPE 3 BOLTS (UN), INSTALLED PER SECTION 506.19(c). SEE DWG E1 FOR FIELD BOLT SIZES.

2). BOLTS SHALL HAVE HEAVY HEX NUT, HEAVY HEX HEAD, AND AT LEAST ONE FLAT WASHER EACH. WASHER TO BE PLACED UNDER TURNED ELEMENT.

3). PIECE MARKS WILL BE LOCATED AS SHOWN ON ERECTION DRAWINGS.

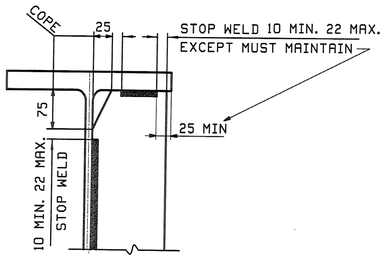

DETAIL "WS1"

STRUCTURES COPY

RECEIVED
CK'D BY LSS OK'D BY RSY
NOV 14 2008
RESUBMIT ____ APPROVED As Noted
BY CPW DATE 11/25/08

NOTE TO ENGINEER:
THESE NOTES ARE NOT INTENDED TO BE ALL INCLUSIVE AND COMPLIANCE WITH RELEVANT SPECIFICATIONS REMAIN UNCHANGED.

REV.	DATE	REMARKS	DWN	CHK	APVL	SHOP
0					11-10-08	

MATERIAL: | SURFACE PREP. & PAINT: | HOLES: | SHOP BOLTS:

DESCRIPTION: GENERAL NOTES

CASCO BAY STEEL STRUCTURES, INC.
75 SPRING HILL ROAD SACO, MAINE 04072
PHONE (207) 282-7360 FAX. (207) 282-1179
TENSOR 2830

STRUCTURE:	ROUTE NO: TH 50, CL 3 BRIDGE NO: BR 34 COUNTY OF ORANGE	DRAWN: JTB	DATE: 10/14
		CHKD: DBH	DATE: 10/28
LOCATION:	TOWN OF CORINTH	JOB NO.	DWG NO.
PROJ NO.	STP BRO 1447(22) (RE-ADVERTISED)	380	GN1
CUSTOMER:	VERMONT AOT		REV. △

JTB Tue Oct 28 15:40:18 EST 2008 /users/jobs/2830/GN1 : RevO

~~043~~ 55

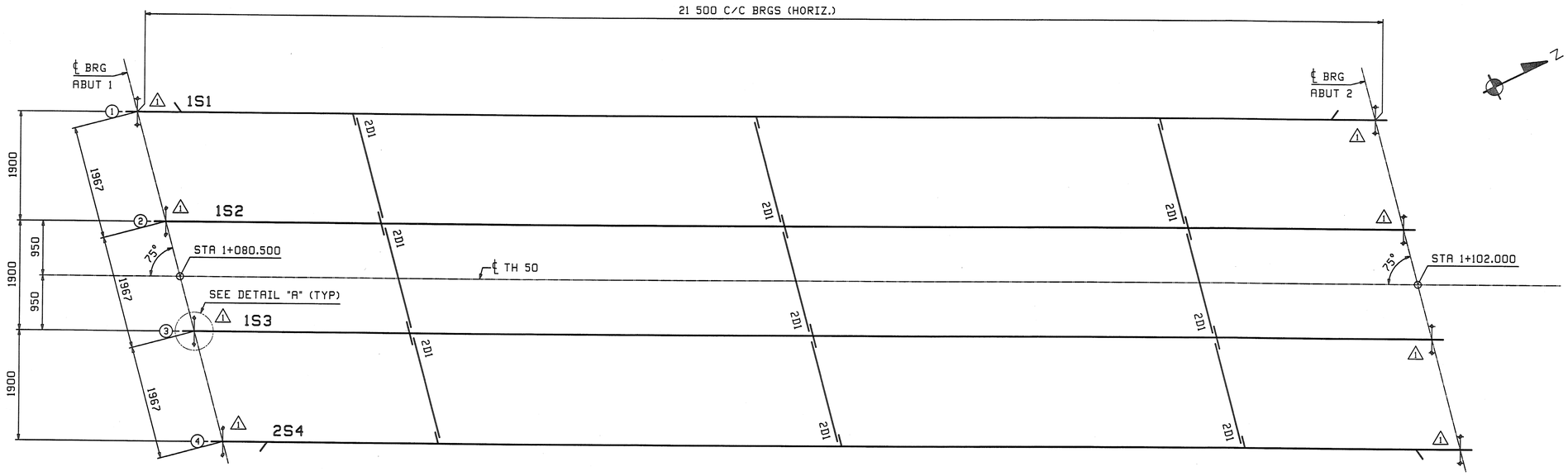

FRAMING PLAN

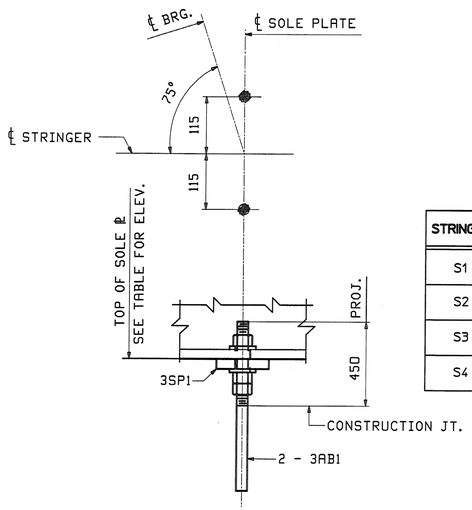

⚠1 DETAIL "A"

⚠1

STRINGER	ELEVATION ABUT 1	ELEVATION ABUT 2
S1	235.502	235.544
S2	235.547	235.576
S3	235.554	235.571
S4	235.522	235.527

FIELD BOLT LIST							A325 Type 3 BOLTS							
LINE	NO REQ'D.	BOLT DIAM.	BOLT LEN.	BOLTS /CONN.	# OF CONN.	GRIP	THICKNESS OF PCS. CONNECTED						WASH CODE	PIECES CONNECTED AND REMARKS
1			57											**INT. DIAPHRAGMS**
2	72	7/8	3 1/4	4	18	23	10	13					1	DIAPHRAGM WEB TO CONN. PL.
3														

WASHER CODES

1: 1 Hard Flat Washer

FIELD BOLT SUMMARY			EXACT COUNT - NONE EXTRA			
LINE	NO. OF BOLTS	BOLT DIAM.	TYPE	BOLT LEN	ACTUAL COUNT	REMARKS
1	72	7/8	A325 Type 3	57 3 1/4	72	
2						
3	72	Hard Flat Washers for 7/8 ø BOLT			F436-3	
4						
5						
6						

LSS RSY
NOV 17 2003
As Noted
CPW 11/25/08

NOTE:
FOR GENERAL NOTES SEE DRAWING GN1.

REV.	DATE	REMARKS	DWN	CHK	APVL	SHOP
⚠1	11/11	ADDED ANCHOR BOLT ASS'Y	ZAD	WJL	11-12-08	

MATERIAL: | SURFACE PREP. & PAINT: | HOLES: | SHOP BOLTS:

DESCRIPTION: FRAMING PLAN & FIELD BOLTS

CASCO BAY STEEL STRUCTURES, INC.
75 SPRING HILL ROAD SACO, MAINE 04072
PHONE (207) 282-7360 FAX. (207) 282-1179
TENSOR 2830

STRUCTURE: ROUTE NO: TH 50, CL 3
BRIDGE NO: BR 34
COUNTY OF ORANGE

DRAWN: JTB DATE: 10/14
CHKD: DBH DATE: 10/28

LOCATION: TOWN OF CORINTH
PROJ NO. STP BRO 1447(22) (RE-ADVERTISED)
CUSTOMER: VERMONT AOT

JOB NO. 380
DWG NO. E1
REV. ⚠1

044 SS

ZAD Wed, Nov 12, 2008 09:49:44 AM /users/jobs/2830/E1.Dwg

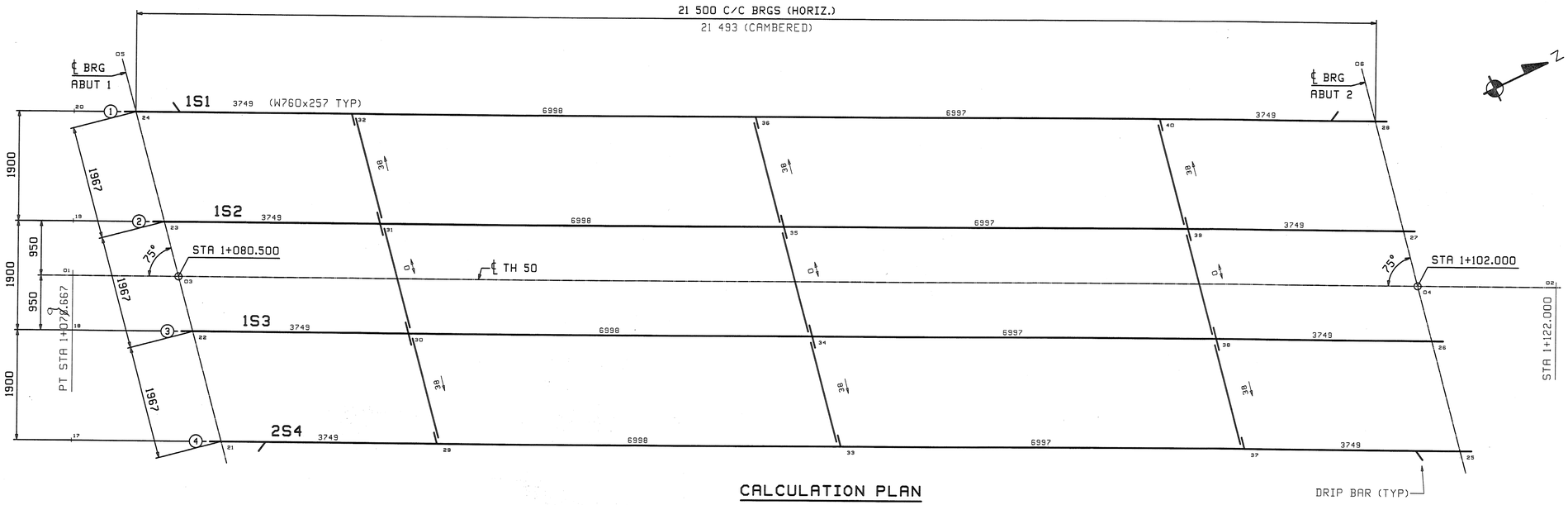

CALCULATION PLAN

GRADES		
Line	ABUT 1	ABUT 2
1	.0132	-.0093
2	.0126	-.0099
3	.0121	-.0104
4	.0115	-.0110

CALCULATION PLAN NOTES:

1. LONGITUDINAL DIMENSIONS ARE SLOPING ALONG BOTTOM OF WEBS WITH CORRECTIONS MADE FOR DL CAMBER, VERTICAL CURVER & GRADE (UN).
2. TRANSVERSE DIMENSIONS ARE IN A HORIZONTAL PLANE (UN).
3. ARROW POINTS TOWARD LOW END OF MEMBER.
4. ENDS OF GIRDERS ARE VERTICAL AFTER DL ROTATION.
5. DIAPHRAGM STIFFENERS ARE NORMAL TO GRADE.
6. BOTTOM POINT NUMBERS = TOP POINT NUMBERS + 100

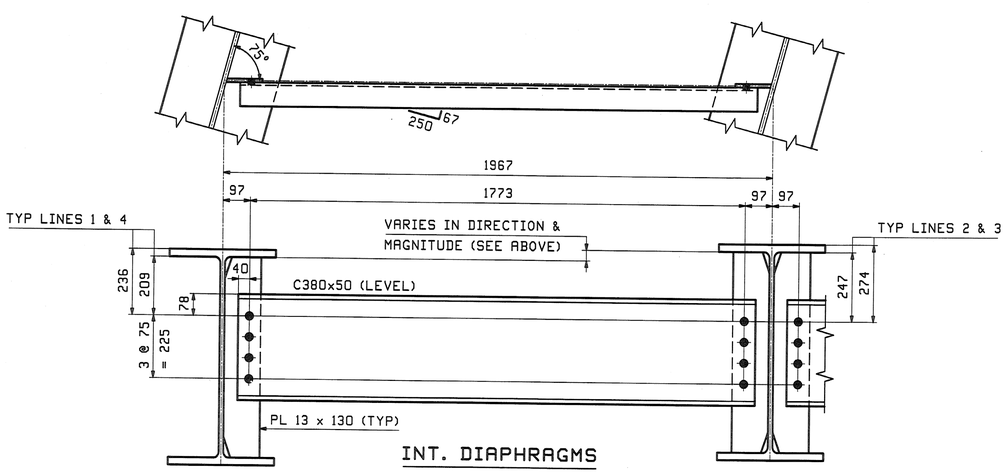

INT. DIAPHRAGMS

NOTES:

1. MATERIAL SHALL BE AASHTO M270M GRADE 345W.
2. ALL BOLT HOLES SHALL BE $\frac{15}{16}$"Ø (24) FOR $\frac{7}{8}$"Ø (22) HSB (UN).

REV.	DATE	REMARKS	DWN	CHK	APVL	SHOP
0					11-10-08	

MATERIAL: | SURFACE PREP. & PAINT: | HOLES: | SHOP BOLTS:

DESCRIPTION: CALCULATION PLAN & LAYOUTS

CASCO BAY STEEL STRUCTURES, INC.
75 SPRING HILL ROAD SACO, MAINE 04072
PHONE (207) 282-7360 FAX. (207) 282-1179
TENSOR 2930

STRUCTURE:	ROUTE NO: TH 50, CL 3 BRIDGE NO: BR 34 COUNTY OF ORANGE	DRAWN: JTB	DATE: 10/13
		CHKD: DBH	DATE: 10/28
LOCATION:	TOWN OF CORINTH	JOB NO.	DWG NO.
PROJ NO.	STP BRO 1447(22) (RE-ADVERTISED)	380	WS1
CUSTOMER:	VERMONT AOT		REV. △

RECEIVED
SK'D BY LJS SK'D BY RCY
NOV 14 2008
RESUBMIT ____ APPROVED As Noted
BY CPW DATE 11/25/08

045 SS

JTB Wed Oct 29 08:18:07 EST 2008 /users/jobs/2930/WS1.Rev0

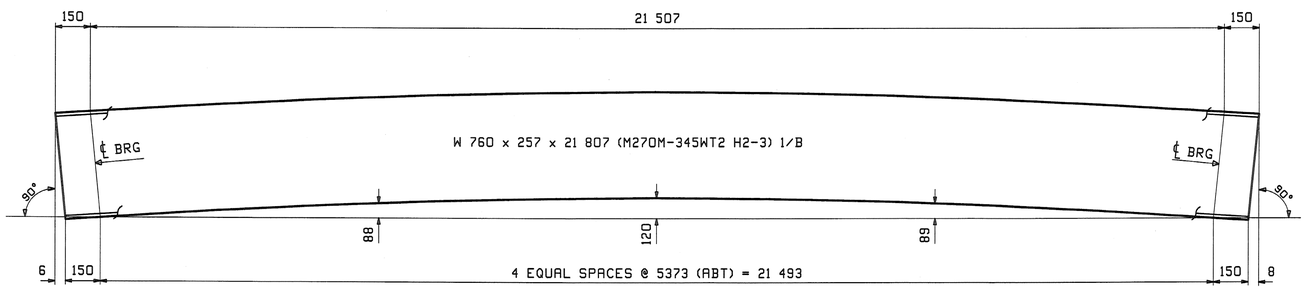

CAMBER DIAGRAM FOR 1S1 THRU 2S4

NOTES:

1. FOR GENERAL NOTES SEE DRAWING GN1.
2. H2-3 DENOTES MATERIAL SUBJECT TO CHARPY V-NOTCH TEST AT H FREQ. FOR ZONE 2

REV.	DATE	REMARKS	DWN	CHK	APVL	SHOP
0					11-10-08	

MATERIAL:	SURFACE PREP. & PAINT:	HOLES:	SHOP BOLTS:
M270M-345W (UN)	AS NOTED ON GN1		

DESCRIPTION: CAMBER DIAGRAM

CASCO BAY STEEL STRUCTURES, INC.
75 SPRING HILL ROAD SACO, MAINE 04072
PHONE (207) 282-7360 FAX. (207) 282-1179
TENSOR 2830

STRUCTURE:	ROUTE NO: TH 50, CL 3 BRIDGE NO: BR 34 COUNTY OF ORANGE	DRAWN: JTB	DATE: 10/14
		CHKD: DBH	DATE: 10/28
LOCATION:	TOWN OF CORINTH	JOB NO.	DWG NO.
PROJ NO.	STP BRO 1447(22) (RE-ADVERTISED)	380	C1
CUSTOMER:	VERMONT AOT		REV. △

RECEIVED
CK'D BY LJS CK'D BY RST
NOV 14 2008
RESUBMIT ____ APPROVED ✓
OPW DATE 11/25/08

046 SS

JTB Tue Oct 28 15:41:08 EST 2008 /users/jobs/2830/C1.Rev0

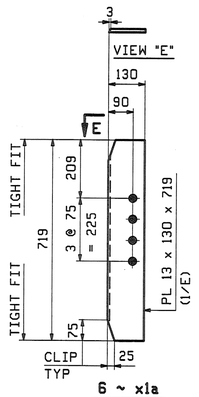

6 ~ x1a

INT. CF CONN.
LINES 1 & 4

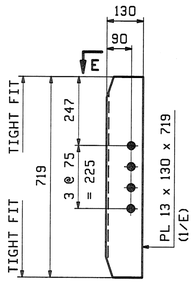

12 ~ x1b

INT. CF CONN.
LINES 2 & 3

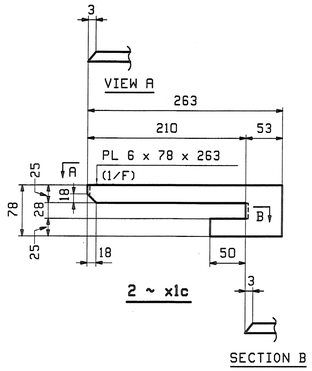

2 ~ x1c

SECTION B

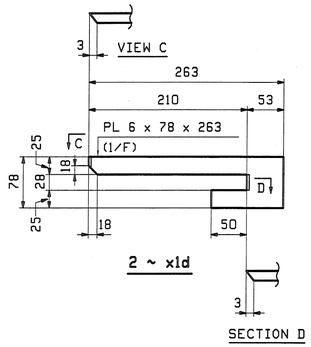

2 ~ x1d

SECTION D

NOTES:
ALL MATERIAL SHALL BE M270M-345W.
ALL BOLT HOLES SHALL BE $\frac{15}{16}$"Ø FOR $\frac{7}{8}$"Ø HSB.
FOR GENERAL NOTES SEE DRAWING GN1.

REV.	DATE	REMARKS	DWN	CHK	APVL	SHOP
0					11-10-08	

MATERIAL:	SURFACE PREP. & PAINT:	HOLES:	SHOP BOLTS:

DESCRIPTION: STRINGER STANDARD DETAILS

CASCO BAY STEEL STRUCTURES, INC.
75 SPRING HILL ROAD SACO, MAINE 04072
PHONE (207) 282-7360 FAX. (207) 282-1179
TENSOR 2830

STRUCTURE:	ROUTE NO: TH 50, CL 3 BRIDGE NO: BR 34 COUNTY OF ORANGE	DRAWN: JTB	DATE: 10/14
		CHKD: DBH	DATE: 10/28
LOCATION:	TOWN OF CORINTH	JOB NO.	DWG NO.
PROJ NO.	STP BRO 1447(22) (RE-ADVERTISED)	380	X1
CUSTOMER:	VERMONT AOT		REV. △

RECEIVED
CKD BY LSO CKD BY RSG
NOV 14 2008
RESUBMIT ____ APPROVED As Noted
CPW DATE 11/25/08

047 55

JTB Tue Oct 28 15:51:36 EST 2008 /users/jobs/2830/X1 | RevD

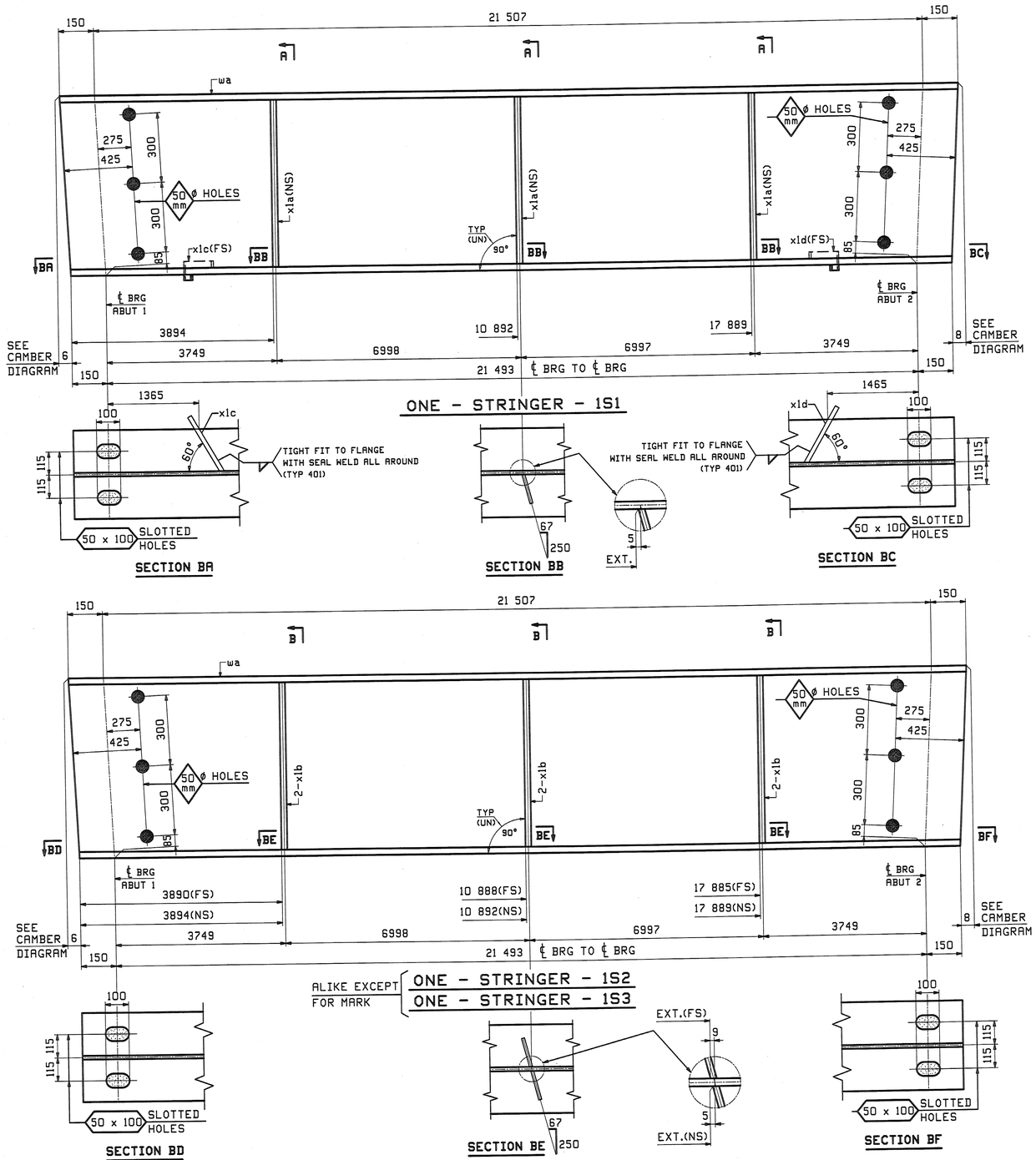

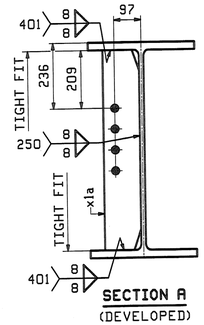

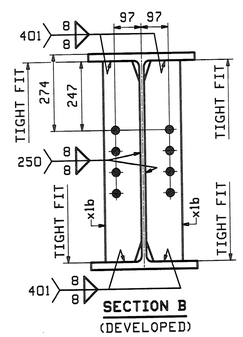

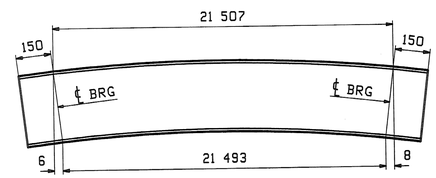

ORIENTATION DIAGRAM - 1S1, 1S2 & 1S3
FOR CAMBER SEE DWG C1

ABM INFO		SHIP	BILL OF MATERIAL					JOB NO.	DRAWING NO.	REV.
								380	1	
PAGE	LINE	MARK	QTY	MARK	MATERIAL	LENGTH m	LENGTH mm	REMARKS	WT	PROCUREMENT NOTES
		1S1	1		STRINGER				5635 kg 12423 lbs	
1	B		1	wa	W 760x257	21	807	(M270M-345WT2)	(H2-3)	
1	E		3	x1a	PL 13x130	0	719	(M270M-345W)		
1	F		1	x1c	PL 6x78	0	263	(M270M-345W)		
1	F		1	x1d	PL 6x78	0	263	(M270M-345W)		
		1S2	1		STRINGER				5662 kg 12482 lbs	
		1S3	1		STRINGER				5662 kg 12482 lbs	
1	B		2	wa	W 760x257	21	807	(M270M-345WT2)	(H2-3)	
1	E		12	x1b	PL 13x130	0	719	(M270M-345W)		

REV.	DATE	REMARKS	DWN	CHK	APVL	SHOP
0					11-10-08	

MATERIAL:	SURFACE PREP. & PAINT:	HOLES:	SHOP BOLTS:
M270M-345W (UN)	AS NOTED ON GN1	24 15/16 ø (UN)	NONE

DESCRIPTION: STRINGERS - 1S1, 1S2 & 1S3

CASCO BAY STEEL STRUCTURES, INC.
75 SPRING HILL ROAD SACO, MAINE 04072
PHONE (207) 282-7360 FAX. (207) 282-1179
TENSOR 2830

STRUCTURE:	ROUTE NO: TH 50, CL 3 BRIDGE NO: BR 34 COUNTY OF ORANGE	DRAWN: JTB	DATE: 10/14
		CHKD: DBH	DATE: 10/28
LOCATION:	TOWN OF CORINTH	JOB NO.	DWG NO.
PROJ NO.	STP BRO 1447(22) (RE-ADVERTISED)	380	1
CUSTOMER:	VERMONT AOT		REV. △

RECEIVED
CKD BY LSS CKD BY RGY
NOV 14 2008
RESUBMIT APPROVED As Noted
OPW DATE 11/25/08

NOTES:
FOR STRINGER STANDARDS SEE DRAWINGS X1.
FOR CAMBER DIAGRAM SEE DRAWING C1.
FOR GENERAL NOTES & WELD PROCEDURES SEE DRAWING GN1.
H2-3 DENOTES MATERIAL SUBJECT TO CHARPY V-NOTCH TESTING.

JTB Tue Oct 28 16:10:21 EST 2008 /users/jobs/2830/1.Rev0

04855

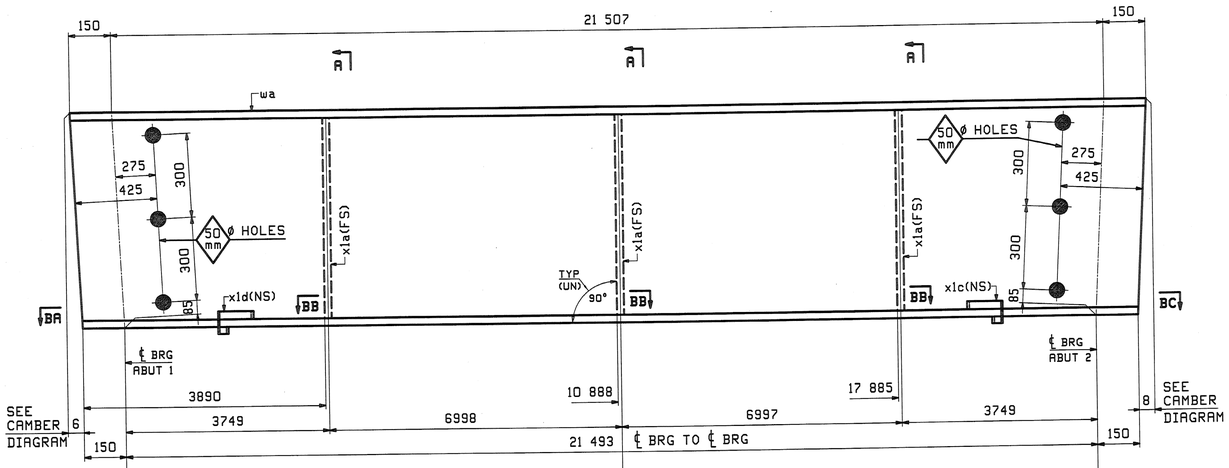

ONE - STRINGER - 2S4

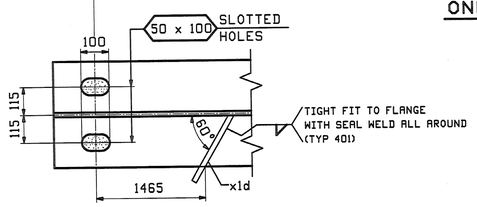

SECTION BA

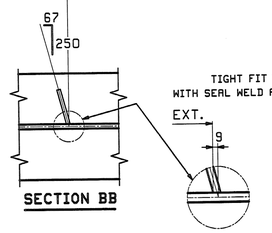

SECTION BB

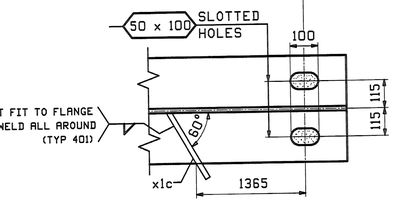

SECTION BC

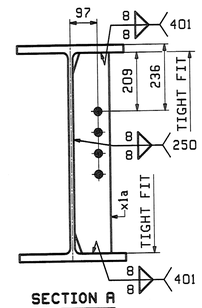

SECTION A
(DEVELOPED)

ABM INFO		SHIP	BILL OF MATERIAL					JOB NO.	DRAWING NO.	REV.
								380	2	
PAGE	LINE	MARK	QTY	MARK	MATERIAL	LENGTH m	LENGTH mm	REMARKS	WT	PROCUREMENT NOTES
		2S4	1		STRINGER				5635 kg 12423 lbs	
1	B		1	wa	W 760x257	21	807	(M270M-345WT2)	(H2-3)	
1	E		3	x1a	PL 13x130	0	719	(M270M-345W)		
1	F		1	x1c	PL 6x78	0	263	(M270M-345W)		
1	F		1	x1d	PL 6x78	0	263	(M270M-345W)		
					DIAPHRAGMS					
1	J	2D1	9		C 380x50	1	853	(M270M-345W)	93 kg 205 lbs	

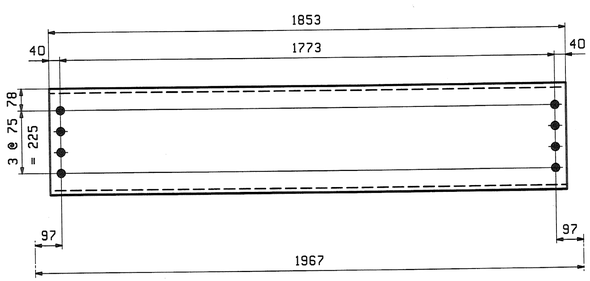

9 ~ INT. DIAPHRAGMS - 2D1

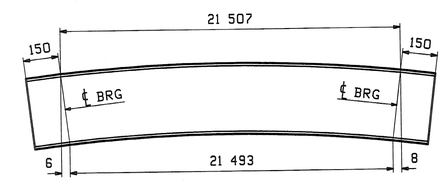

ORIENTATION DIAGRAM - 2S4
FOR CAMBER SEE DWG C1

RECEIVED
CKD BY LJS CKD BY RSY
NOV 14 2008
RESUBMIT ____ APPROVED As Noted
BY OPW DATE 11/25/08

STRINGER NOTES:

FOR STRINGER STANDARDS SEE DRAWINGS X1.
FOR CAMBER DIAGRAM SEE DRAWING C1.
FOR GENERAL NOTES & WELD PROCEDURES SEE DRAWING GN1.
H2-3 DENOTES MATERIAL SUBJECT TO CHARPY V-NOTCH TESTING.

REV.	DATE	REMARKS	DWN	CHK	APVL	SHOP
0					11-10-08	

MATERIAL:	SURFACE PREP. & PAINT:	HOLES:	SHOP BOLTS:
M270M-345W (UN)	AS NOTED ON GN1	24 15/16ϕ (UN)	NONE

DESCRIPTION: STRINGER - 2S4 & INT. DIAPHRAGMS - 2D1

CASCO BAY STEEL STRUCTURES, INC.
75 SPRING HILL ROAD SACO, MAINE 04072
PHONE (207) 282-7360 FAX. (207) 282-1179
TENSOR 2030

STRUCTURE:	DRAWN: JTB	DATE: 10/16
ROUTE NO: TH 50, CL 3 BRIDGE NO: BR 34 COUNTY OF ORANGE	CHKD: DBH	DATE: 10/28
LOCATION: TOWN OF CORINTH	JOB NO. 380	DWG NO. 2
PROJ NO. STP BRO 1447(22) (RE-ADVERTISED)		REV. △
CUSTOMER: VERMONT AOT		

049 SS

JTB Tue Oct 28 10:10:03 EST 2008 /users/jobs/2380/2 : Rev0

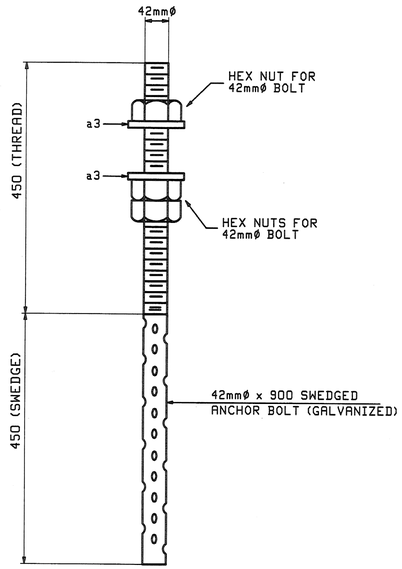

17 - ANCHOR BOLTS ~ 3AB1

1 - EXTRA FOR TESTING
NO NUTS OR WASHERS REQ'D

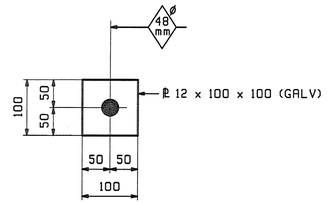

32 - PLATE WASHERS ~ a3

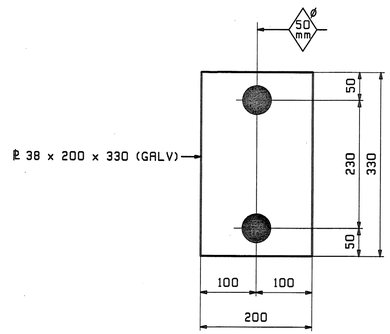

8 - SOLE PLATES ~ 3SP1

ABM INFO		SHIP	BILL OF MATERIAL					JOB NO.	DRAWING NO.	REV.
									3	
PAGE	LINE	MARK	QTY	MARK	MATERIAL	LENGTH m	LENGTH mm	REMARKS	WT	PROCUREMENT NOTES
					ANCHOR BOLTS					
2	B		17	3AB1	ROD 42 Ø	0	900	(M568M) 450mm THREAD (GALV)		
2	C		48		42mm DIA. HEX NUT			(M291M)		
2	D		32	a3	PL 12x100	0	100	(M270M-250) (GALV)		
					SOLE PLATES					
2	G		8	3SP1	PL 38x200	0	330	(M270M-250) (GALV)		

LSS PSY
NOV 17 2008
Ashland
GPW 11/25/08

REV.	DATE	REMARKS	DWN	CHK	APVL	SHOP
0					11-12-08	

MATERIAL:	SURFACE PREP. & PAINT:	HOLES:	SHOP BOLTS:
M270M-250 (UN)	AS NOTED ON GN1	AS NOTED	AS NOTED

DESCRIPTION: ANCHOR BOLTS & SOLE PLATES

CASCO BAY STEEL STRUCTURES, INC.
75 SPRING HILL ROAD SACO, MAINE 04072
PHONE (207) 282-7360 FAX. (207) 282-1179

TENSOR 2830

STRUCTURE:	ROUTE NO: TH 50, CL 3 BRIDGE NO: BR 34 CORINTH COUNTY OF ORANGE	DRAWN: ZAD	DATE: 11/10
		CHKD: WJL	DATE: 11/12
LOCATION:	TOWN OF CORINTH	JOB NO.	DWG NO.
PROJ NO.	STP BRO 1447(22) (RE-ADVERTISED)	380	3
CUSTOMER:	VERMONT AOT		REV. △

050 SS

2010 Wed, Nov 12, 2008 10:25:50 AM /users/jobs/2830/3.Rev0

GENERAL NOTES

CONSTRUCTION SPECIFICATIONS

1). ALL MATERIAL AND WORKMANSHIP TO BE IN ACCORDANCE WITH THE STATE OF VERMONT AGENCY OF TRANSPORTATION STANDARD SPECIFICATIONS FOR CONSTRUCTION DATED 2006 WITH LATEST REVISIONS AND THE AASHTO LRFD BRIDGE CONSTRUCTION SPECIFICATIONS FOR HIGHWAY BRIDGES DATED 1998 AND ITS LATEST REVISIONS.

2 OK

MATERIAL SPECIFICATIONS

1). UNLESS OTHERWISE NOTED, ALL STEEL TO BE AASHTO M270M (ASTM A709M) GRADE 345W. OK

2). MATERIAL NOTED "CVN" OR "H2-3" ON DETAIL DRAWINGS SHALL BE CHARPY V-NOTCH TESTED IN ACCORDANCE WITH THE REQUIREMENTS OF VERMONT STANDARD SPECIFICATIONS SECTION 714.01.

3). HIGHT STRENGTH BOLTS: 7/8"Ø (22 OK) ASTM A325 (AASHTO M164) TYPE 3 IN 15/16"Ø (25 24 per Section 506.19 (c)) HOLES. NUTS SHALL BE A563 (AASHTO M291) GRADE C3. ~~HEAVY~~ BOLTS & NUTS SHALL BE ROTATIONAL CAPACITY TESTED. DO NOT MIX NUTS & BOLTS FROM DIFFERENT CONTAINERS UNLESS ALL BOLTS & NUTS HAVE THE SAME LOT NUMBER.

FABRICATION

1). ALL HOLES SHALL BE PUNCHED OR DRILLED FULL SIZE (UN).

WELDING

1). THE CONFIGURATION OF THE WELD JOINTS AND ALL WELDING PROCEDURES SHALL BE IN ACCORDANCE WITH AASHTO/AWS D1.5-02 BRIDGE WELDING CODE AND IN ADDITION TO SPECIFICATIONS SHOWN ABOVE. ALL WELDING WILL BE DETAILED TO PRE-QUALIFIED JOINTS, UNLESS PROHIBITED BY THE DESIGNER.

2). WELDING OF MAIN LOAD CARRYING MEMBERS AND ATTACHMENTS SHALL BE PERFORMED USING THE AUTOMATIC SUBMERGED ARC & SHIELDED METAL ARC PROCESSES. ALL WELDS ARE CONTINUOUS U.N.

3). NON DESTRUCTIVE TESTING OF WELDS SHALL BE IN ACCORDANCE WITH THE REFERENCED SPECIFICATION.

4). SEE DETAIL "WS1" ON THIS DRAWING FOR WELD TERMINATION DETAIL.

CLEANING

1. ALL STEEL SHALL BE BLAST CLEANED IN ACCORDANCE WITH SSPC SP-~~8~~ 10. OK
2. STRUCTURAL STEEL SHALL NOT BE PAINTED.

FIELD CONNECTIONS

1). ALL FIELD CONNECTIONS SHALL BE MADE WITH 7/8" (22 mm OK) DIAMETER HIGH STRENGTH A-325 TYPE 3 BOLTS (UN), INSTALLED PER SECTION 506.19(c). SEE DWG E1 FOR FIELD BOLT SIZES.

2). BOLTS SHALL HAVE HEAVY HEX NUT, HEAVY HEX HEAD, AND AT LEAST ONE FLAT WASHER EACH. WASHER TO BE PLACED UNDER TURNED ELEMENT.

3). PIECE MARKS WILL BE LOCATED AS SHOWN ON ERECTION DRAWINGS.

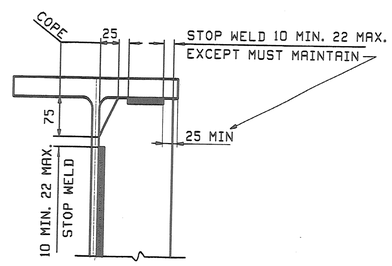

DETAIL "WS1"

Sp-10 - GK
PT Status - WK
non-un + comments

RECEIVED
CKD BY ADS OKD BY JSS
NOV 14 2008
RESUBMIT ____ APPROVED As Noted
BY DATE

NOTE TO ENGINEER:
THESE NOTES ARE NOT INTENDED TO BE ALL INCLUSIVE AND COMPLIANCE WITH RELEVANT SPECIFICATIONS REMAIN UNCHANGED.

REV.	DATE	REMARKS	DWN	CHK	APVL	SHOP
0					11-10-08	

MATERIAL: | SURFACE PREP. & PAINT: | HOLES: | SHOP BOLTS:

DESCRIPTION: GENERAL NOTES

CASCO BAY STEEL STRUCTURES, INC.
75 SPRING HILL ROAD SACO, MAINE 04072
PHONE (207) 282-7360 FAX. (207) 282-1179
TENSOR 2830

STRUCTURE: ROUTE NO: TH 50, CL 3
BRIDGE NO: BR 34
COUNTY OF ORANGE

DRAWN: JTB	DATE: 10/14		
CHKD: DBH	DATE: 10/28		
LOCATION: TOWN OF CORINTH	JOB NO. 380	DWG NO. GN1	
PROJ NO. STP BRO 1447(22) (RE-ADVERTISED)			
CUSTOMER: VERMONT AOT		REV. △	

JTB Tue Oct 28 15:42:10 EST 2008 /users/jobs/2830/GN1 Rev0

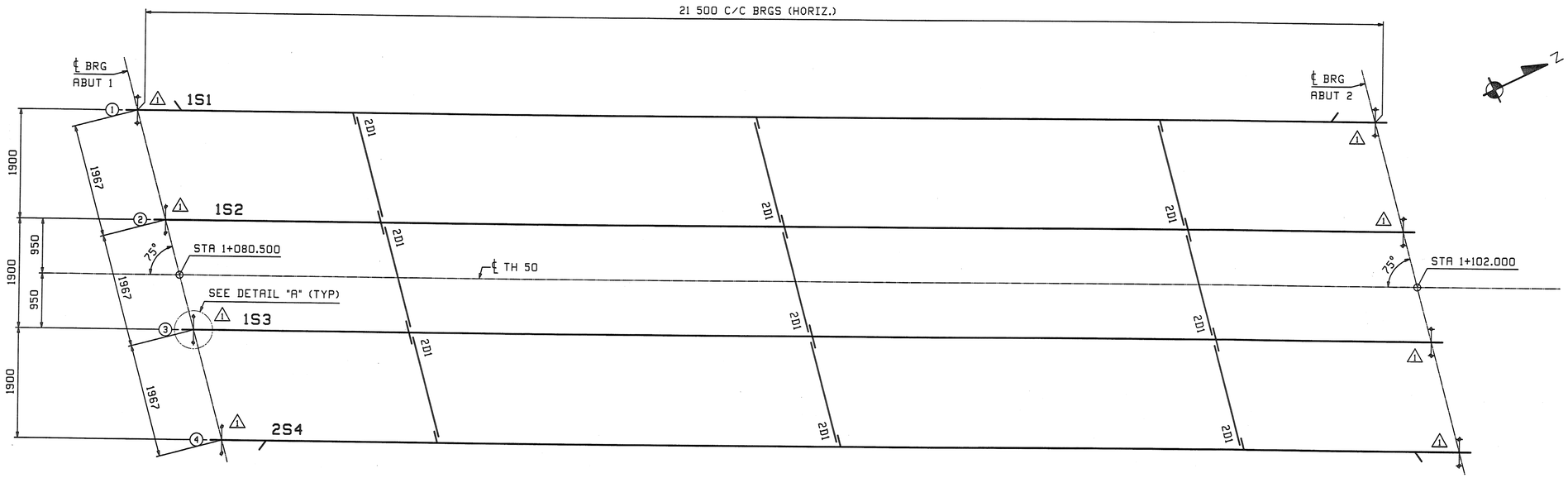

FRAMING PLAN

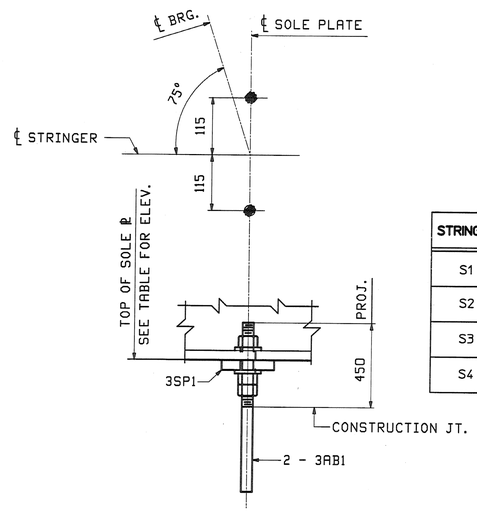

⚠1 DETAIL "A"

⚠1

STRINGER	ELEVATION ABUT 1	ELEVATION ABUT 2
S1	235.502	235.544
S2	235.547	235.576
S3	235.554	235.571
S4	235.522	235.527

English → Metric

FIELD BOLT LIST							A325 Type 3 BOLTS						
LINE	NO. REQ'D.	BOLT DIAM.	BOLT LEN.	BOLTS /CONN.	# OF CONN.	GRIP	THICKNESS OF PCS. CONNECTED					WASH CODE	PIECES CONNECTED AND REMARKS
1		~~3/4~~ 7/8	~~5"~~ 2 1/4										**INT. DIAPHRAGMS**
2	72			4	18	23	10	13				1	DIAPHRAGM WEB TO CONN. PL.
3													

WASHER CODES

1: 1 Hard Flat Washer

FIELD BOLT SUMMARY				EXACT COUNT - NONE EXTRA		
LINE	NO. OF BOLTS	BOLT DIAM.	TYPE	BOLT LEN	ACTUAL COUNT	REMARKS
1	72	~~3/4~~ 7/8	A325 Type 3	~~5"~~ 2 1/4	72	
2						
3	72	Hard Flat Washers for 7/8 BOLT				F436-3
4						
5						
6						

NOTE:
FOR GENERAL NOTES SEE DRAWING GN1.

REV.	DATE	REMARKS	DWN	CHK	APVL	SHOP
⚠1	11/11	ADDED ANCHOR BOLT ASS'Y	ZAD	WJL	11-12-08	

MATERIAL: | SURFACE PREP. & PAINT: | HOLES: | SHOP BOLTS:

DESCRIPTION: FRAMING PLAN & FIELD BOLTS

CASCO BAY STEEL STRUCTURES, INC.
75 SPRING HILL ROAD SACO, MAINE 04072
PHONE (207) 282-7360 FAX. (207) 282-1179
TENSOR 2030

STRUCTURE:	ROUTE NO: TH 50, CL 3 BRIDGE NO: BR 34 COUNTY OF ORANGE	DRAWN: JTB	DATE: 10/14
		CHKD: DBH	DATE: 10/28
LOCATION:	TOWN OF CORINTH	JOB NO.	DWG NO.
PROJ NO.	STP BRO 1447(22) (RE-ADVERTISED)	380	E1
CUSTOMER:	VERMONT AOT		REV. ⚠1

NOV 17 2008
APPROVED
DATE
As Noted

ZAD Wed, Nov 12, 2008 09:54:44 AM /Users/jobs/2030/E1 : Rev1

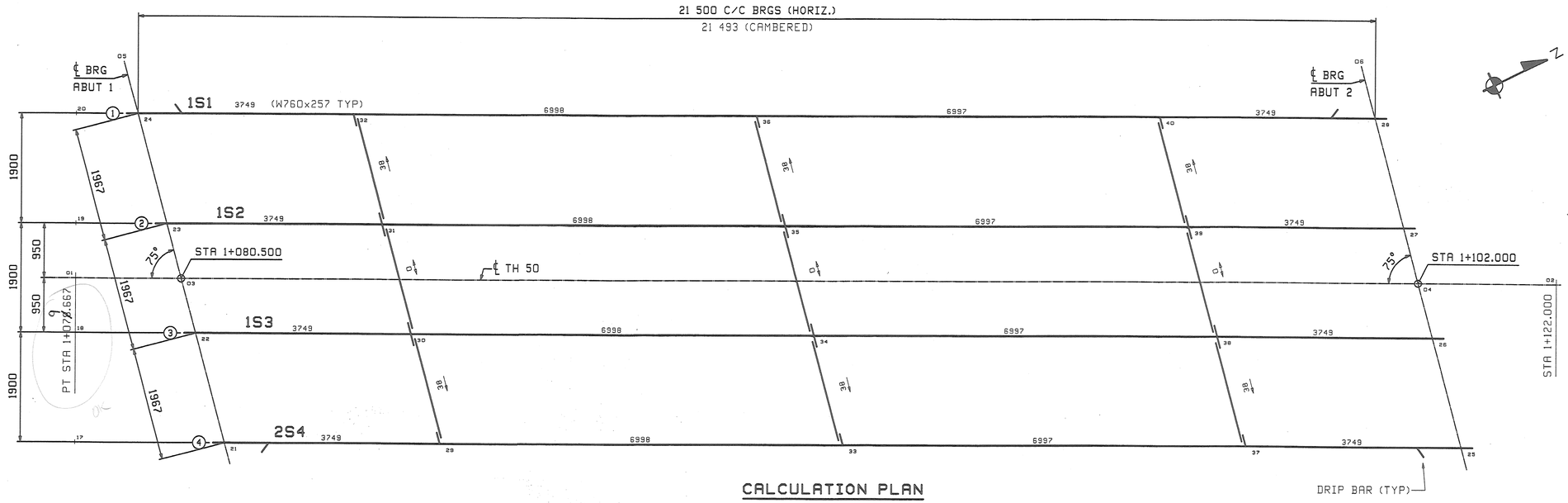

CALCULATION PLAN

GRADES		
Line	ABUT 1	ABUT 2
1	.0132	-.0093
2	.0126	-.0099
3	.0121	-.0104
4	.0115	-.0110

CALCULATION PLAN NOTES:

1. LONGITUDINAL DIMENSIONS ARE SLOPING ALONG BOTTOM OF WEBS WITH CORRECTIONS MADE FOR DL CAMBER, VERTICAL CURVER & GRADE (UN).
2. TRANSVERSE DIMENSIONS ARE IN A HORIZONTAL PLANE (UN).
3. ARROW POINTS TOWARD LOW END OF MEMBER.
4. ENDS OF GIRDERS ARE VERTICAL AFTER DL ROTATION.
5. DIAPHRAGM STIFFENERS ARE NORMAL TO GRADE.
6. BOTTOM POINT NUMBERS = TOP POINT NUMBERS + 100

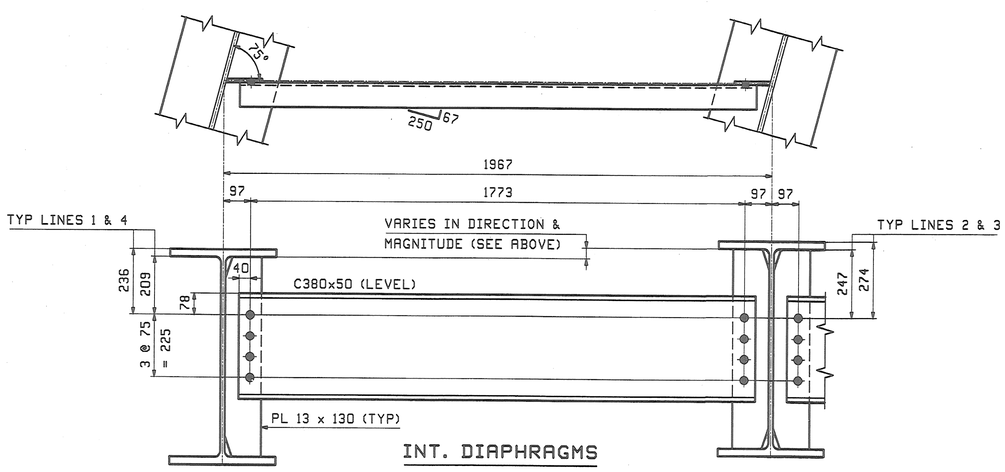

INT. DIAPHRAGMS

NOTES:

1. MATERIAL SHALL BE AASHTO M270M GRADE 345W.
2. ALL BOLT HOLES SHALL BE $\frac{15}{16}$"Ø FOR $\frac{7}{8}$"Ø HSB (UN).

~~25~~ 24 ~~Ø~~ 22Ø Metric JK

RECEIVED
OK'D BY LSS OK'D BY
NOV 14 2008
RESUBMIT APPROVED
BY DATE

REV.	DATE	REMARKS	DWN	CHK	APVL	SHOP
0					11-10-08	

MATERIAL: | SURFACE PREP. & PAINT: | HOLES: | SHOP BOLTS:

DESCRIPTION: CALCULATION PLAN & LAYOUTS

CASCO BAY STEEL STRUCTURES, INC.
75 SPRING HILL ROAD SACO, MAINE 04072
PHONE (207) 282-7360 FAX. (207) 282-1179
TENSOR 2030

STRUCTURE: ROUTE NO: TH 50, CL 3
BRIDGE NO: BR 34
COUNTY OF ORANGE

DRAWN: JTB DATE: 10/13
CHKD: DBH DATE: 10/28

LOCATION: TOWN OF CORINTH
PROJ NO. STP BRO 1447(22) (RE-ADVERTISED)
CUSTOMER: VERMONT AOT

JOB NO. 380
DWG NO. WS1
REV. △

JTB Wed Oct 29 08:08:07 EST 2008 /users/jobs/2830/WS1 : Rev0

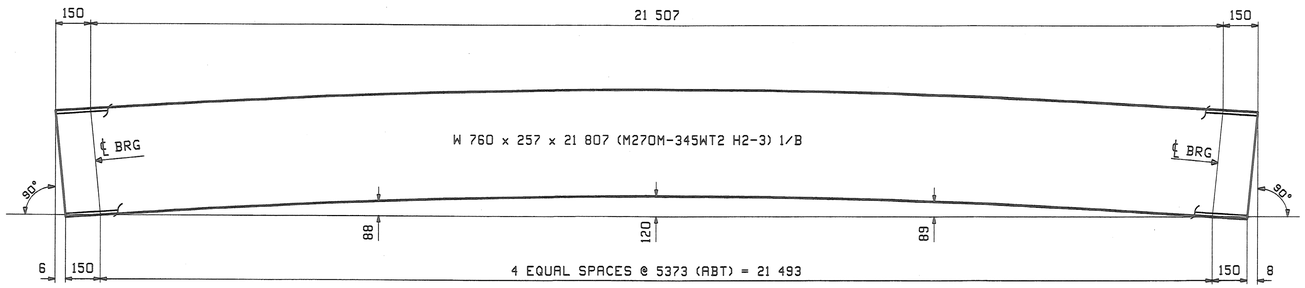

CAMBER DIAGRAM FOR 1S1 THRU 2S4

NOTES:

1. FOR GENERAL NOTES SEE DRAWING GN1.
2. H2-3 DENOTES MATERIAL SUBJECT TO CHARPY V-NOTCH TEST AT H FREQ. FOR ZONE 2

REV.	DATE	REMARKS	DWN	CHK	APVL	SHOP
0					11-10-08	

MATERIAL:	SURFACE PREP. & PAINT:	HOLES:	SHOP BOLTS:
M270M-345W (UN)	AS NOTED ON GN1		

DESCRIPTION: CAMBER DIAGRAM

CASCO BAY STEEL STRUCTURES, INC.
75 SPRING HILL ROAD SACO, MAINE 04072
PHONE (207) 282-7360 FAX. (207) 282-1179

TENSOR 2830

STRUCTURE: ROUTE NO: TH 50, CL 3 BRIDGE NO: BR 34 COUNTY OF ORANGE		DRAWN: JTB	DATE: 10/14
		CHKD: DBH	DATE: 10/28
LOCATION: TOWN OF CORINTH		JOB NO.	DWG NO.
PROJ NO. STP BRO 1447(22) (RE-ADVERTISED)		380	C1
CUSTOMER: VERMONT AOT			REV. △

RECEIVED
CK'D BY DBH CK'D BY
NOV 14 2008
RESUBMIT APPROVED
BY DATE

JTB Tue Oct 28 15:47:08 EST 2008 /users/jobs/2830/C1.Rev0

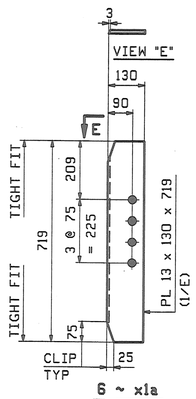

6 ~ x1a

INT. CF CONN.
LINES 1 & 4

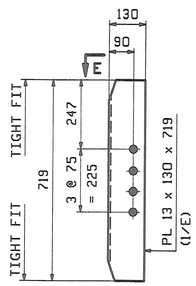

12 ~ x1b

INT. CF CONN.
LINES 2 & 3

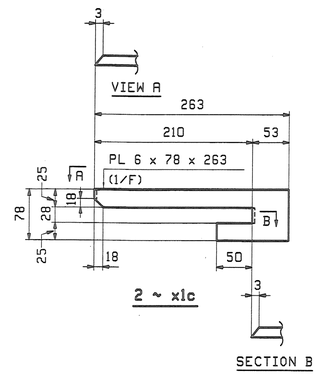

2 ~ x1c

SECTION B

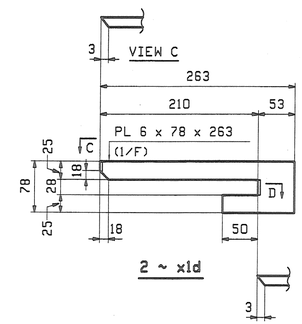

2 ~ x1d

SECTION D

NOTES:
ALL MATERIAL SHALL BE M270M-345W.22
ALL BOLT HOLES SHALL BE 15/16"Ø FOR 7/8"Ø HSB.
FOR GENERAL NOTES SEE DRAWING GN1.

REV.	DATE	REMARKS	DWN	CHK	APVL	SHOP
0					11-10-08	

MATERIAL:	SURFACE PREP. & PAINT:	HOLES:	SHOP BOLTS:

DESCRIPTION: STRINGER STANDARD DETAILS

CASCO BAY STEEL STRUCTURES, INC.
75 SPRING HILL ROAD SACO, MAINE 04072
PHONE (207) 282-7360 FAX. (207) 282-1179
TENSOR 2830

STRUCTURE:	ROUTE NO: TH 50, CL 3 BRIDGE NO: BR 34 COUNTY OF ORANGE	DRAWN: JTB	DATE: 10/14
		CHKD: DBH	DATE: 10/28
LOCATION:	TOWN OF CORINTH	JOB NO.	DWG NO.
PROJ NO.	STP BRO 1447(22) (RE-ADVERTISED)	380	X1
CUSTOMER:	VERMONT AOT		REV. △

RECEIVED
CK'D BY LSS CK'D BY KAB
NOV 14 2008
RESUBMIT APPROVED AcNoted
BY DATE

JTB Tue Oct 28 15:31:38 EST 2008 /users/jobs/2830/X1 : RevD

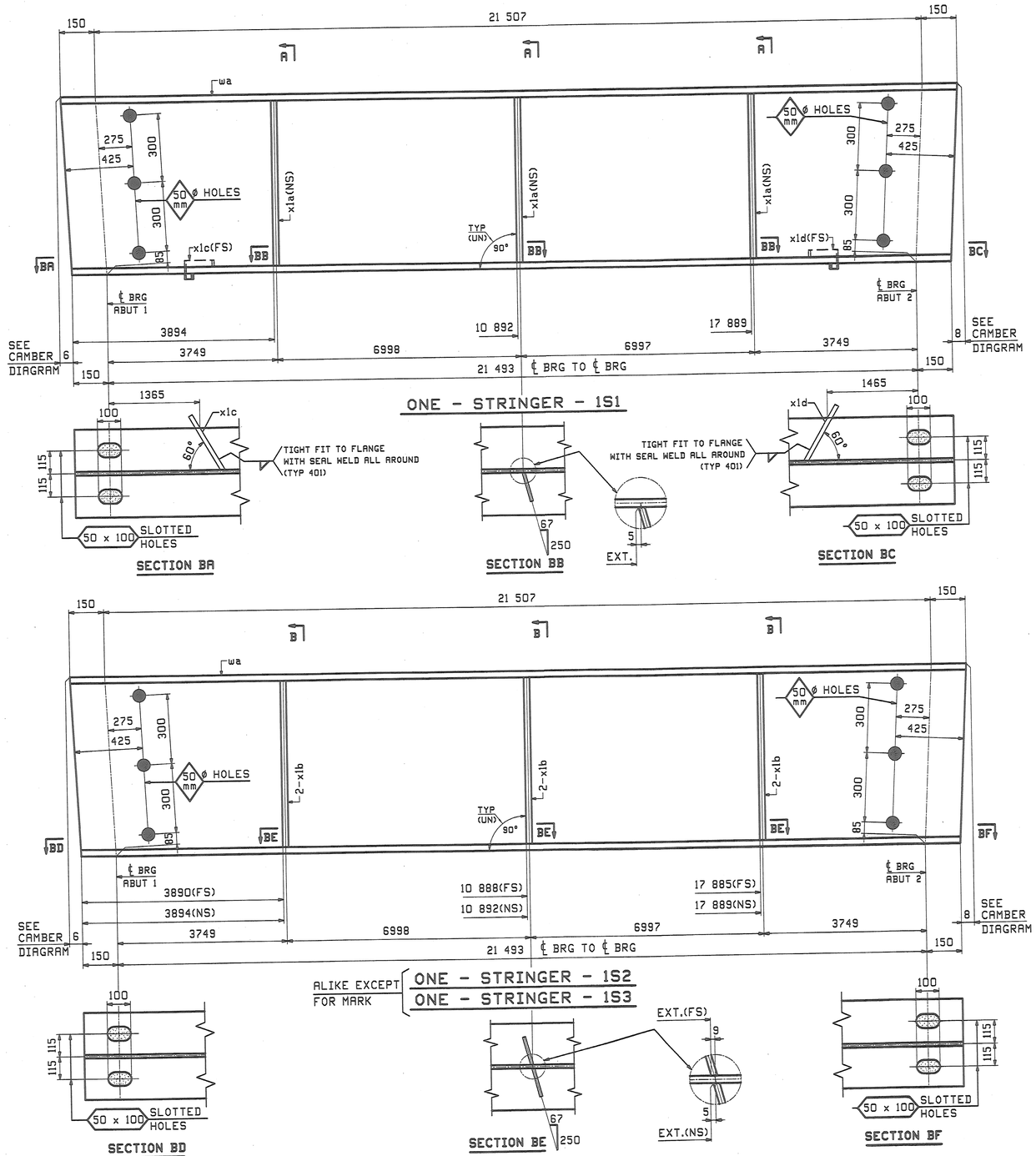

ONE - STRINGER - 1S1

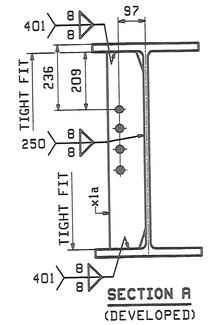

SECTION A
(DEVELOPED)

ALIKE EXCEPT FOR MARK
ONE - STRINGER - 1S2
ONE - STRINGER - 1S3

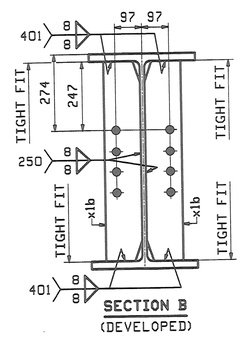

SECTION B
(DEVELOPED)

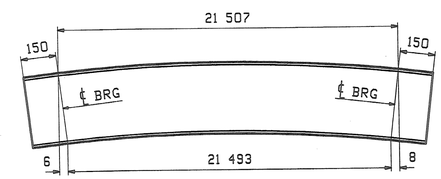

ORIENTATION DIAGRAM - 1S1, 1S2 & 1S3
FOR CAMBER SEE DWG C1

ABM INFO		SHIP	BILL OF MATERIAL					JOB NO. 380	DRAWING NO. 1	REV.
PAGE	LINE	MARK	QTY	MARK	MATERIAL	LENGTH m	LENGTH mm	REMARKS	WT	PROCUREMENT NOTES
		1S1	1		STRINGER				5839 kg 12423 lbs	
1	B		1	wa	W 760x257	21	807	(M270M-345WT2)	(H2-3)	
1	E		3	x1a	PL 13x130	0	719	(M270M-345W)		
1	F		1	x1c	PL 6x78	0	263	(M270M-345W)		
1	F		1	x1d	PL 6x78	0	263	(M270M-345W)		
		1S2	1		STRINGER				5662 kg 12482 lbs	
		1S3	1		STRINGER				5662 kg 12482 lbs	
1	B		2	wa	W 760x257	21	807	(M270M-345WT2)	(H2-3)	
1	E		12	x1b	PL 13x130	0	719	(M270M-345W)		

REV.	DATE	REMARKS	DWN	CHK	APVL	SHOP
0					11-10-08	

MATERIAL: M270M-345W (UN)
SURFACE PREP. & PAINT: AS NOTED ON GN1
HOLES: 24 15/16ø (UN)
SHOP BOLTS: NONE

DESCRIPTION: STRINGERS - 1S1, 1S2 & 1S3

CASCO BAY STEEL STRUCTURES, INC.
75 SPRING HILL ROAD SACO, MAINE 04072
PHONE (207) 282-7360 FAX. (207) 282-1179
TENSOR 2830

STRUCTURE: ROUTE NO: TH 50, CL 3
BRIDGE NO: BR 34
COUNTY OF ORANGE

DRAWN: JTB	DATE: 10/14	
CHKD: DBH	DATE: 10/28	
LOCATION: TOWN OF CORINTH	JOB NO. 380	DWG NO. 1
PROJ NO. STP BRO 1447(22) (RE-ADVERTISED)		REV. 0
CUSTOMER: VERMONT AOT		

RECEIVED
CKD BY BSE ORD BY RCY
NOV 14 2008
RESUBMIT ____ APPROVED As Noted
BY DATE

NOTES:
FOR STRINGER STANDARDS SEE DRAWINGS X1.
FOR CAMBER DIAGRAM SEE DRAWING C1.
FOR GENERAL NOTES & WELD PROCEDURES SEE DRAWING GN1.
H2-3 DENOTES MATERIAL SUBJECT TO CHARPY V-NOTCH TESTING.

JTB Tue Oct 28 16:02:21 EST 2008 /users/jobs/2830/1;Rev0

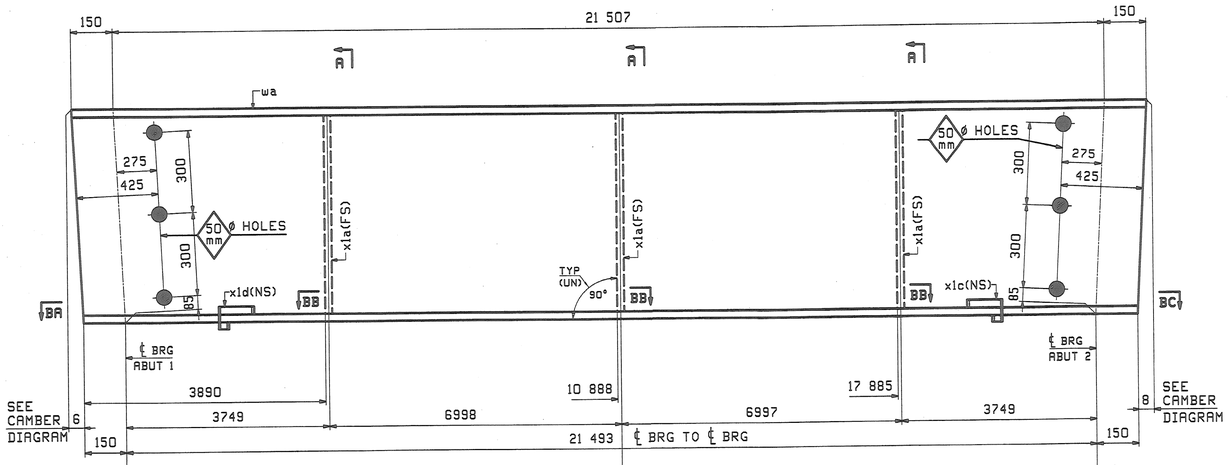

ONE - STRINGER - 2S4

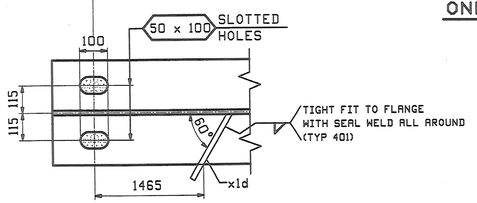

SECTION BA

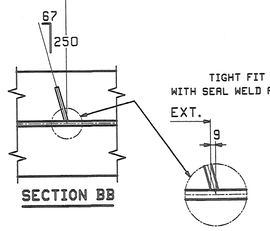

SECTION BB

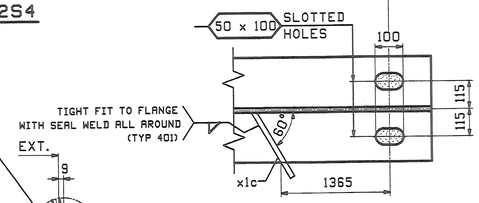

SECTION BC

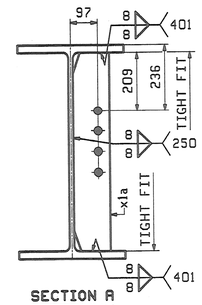

SECTION A
(DEVELOPED)

ABM INFO		SHIP	BILL OF MATERIAL					JOB NO. 380	DRAWING NO. 2	REV.
PAGE	LINE	MARK	QTY	MARK	MATERIAL	LENGTH m	LENGTH mm	REMARKS	WT	PROCUREMENT NOTES
		2S4	1		STRINGER				5835 kg 12423 lbs	
1	B		1	wa	W 760x257	21	807	(M270M-345WT2)	(H2-3)	
1	E		3	x1a	PL 13x130	0	719	(M270M-345W)		
1	F		1	x1c	PL 6x78	0	263	(M270M-345W)		
1	F		1	x1d	PL 6x78	0	263	(M270M-345W)		
					DIAPHRAGMS					
1	J	2D1	9		C 380x50	1	853	(M270M-345W)	93 kg 205 lbs	

$\frac{50\,kg}{m} \times 1.853\,m = 93\,kg$

Metric C 380 x 50 = English C 15 x 33.9

$\frac{33.9\,lb}{ft} \times 1853\,mm \times \frac{1\,in}{25.4\,mm} \times \frac{1\,ft}{12\,in} = 205\,lb$

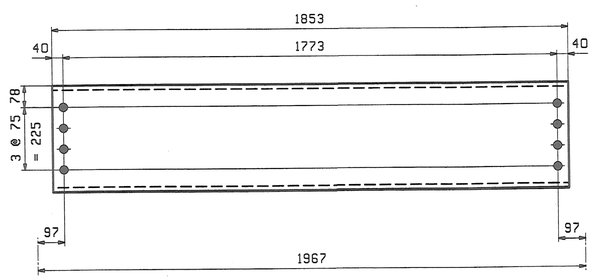

9 ~ INT. DIAPHRAGMS - 2D1

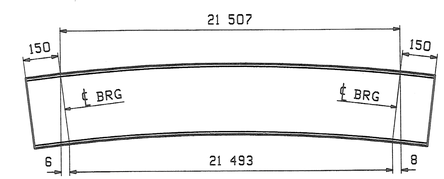

ORIENTATION DIAGRAM - 2S4
FOR CAMBER SEE DWG C1

RECEIVED
CK'D BY BS CK'D BY
NOV 14 2008
RESUBMIT APPROVED As Noted
BY DATE

STRINGER NOTES:
FOR STRINGER STANDARDS SEE DRAWINGS X1.
FOR CAMBER DIAGRAM SEE DRAWING C1.
FOR GENERAL NOTES & WELD PROCEDURES SEE DRAWING GN1.
H2-3 DENOTES MATERIAL SUBJECT TO CHARPY V-NOTCH TESTING.

REV.	DATE	REMARKS	DWN	CHK	APVL	SHOP
0					11-10-08	

MATERIAL:	SURFACE PREP. & PAINT:	HOLES:	SHOP BOLTS:
M270M-345W (UN)	AS NOTED ON GN1	24 (15/16ø) (UN)	NONE

DESCRIPTION: STRINGER - 2S4 & INT. DIAPHRAGMS - 2D1

CASCO BAY STEEL STRUCTURES, INC.
75 SPRING HILL ROAD SACO, MAINE 04072
PHONE (207) 282-7360 FAX. (207) 282-1179
TENSOR 2930

STRUCTURE:	DRAWN:	DATE:
ROUTE NO: TH 50, CL 3 BRIDGE NO: BR 34 COUNTY OF ORANGE	JTB	10/16
	CHKD: DBH	DATE: 10/28
LOCATION: TOWN OF CORINTH	JOB NO.	DWG NO.
PROJ NO. STP BRO 1447(22) (RE-ADVERTISED)	380	2
CUSTOMER: VERMONT AOT		REV. △

JTB Tue Oct 28 16:10:03 EST 2008 /users/jobs/2930/2 1 Rev0