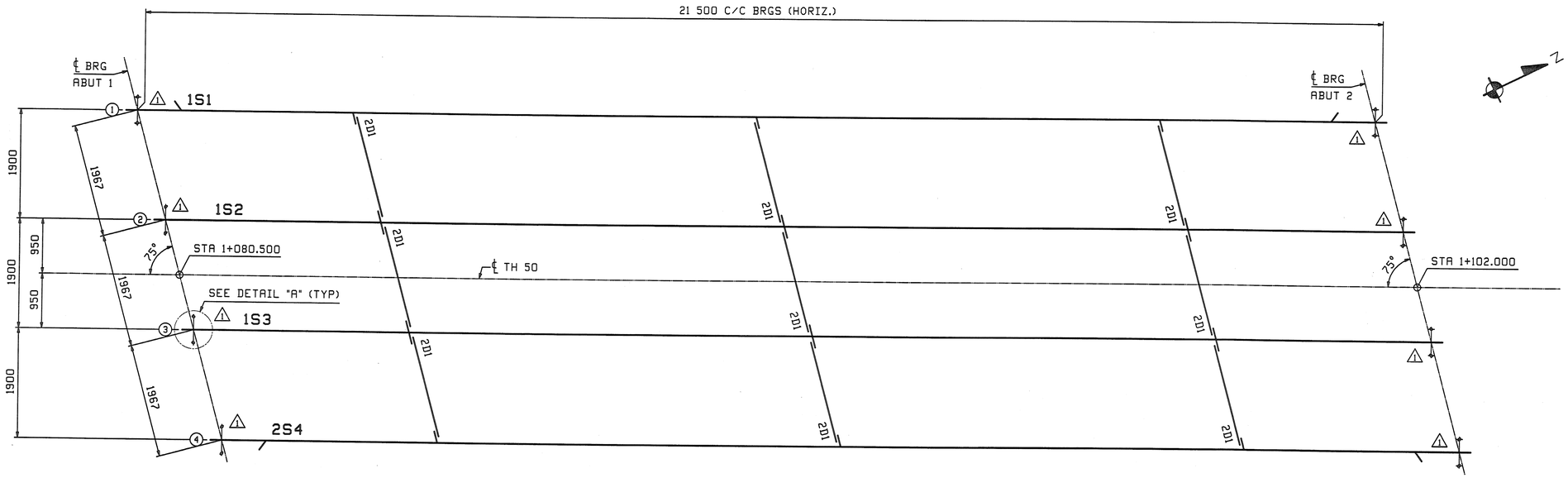

FRAMING PLAN

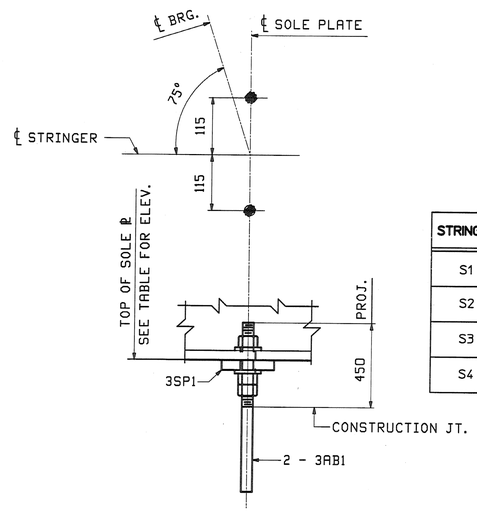

⚠1 DETAIL "A"

⚠1

STRINGER	ELEVATION ABUT 1	ELEVATION ABUT 2
S1	235.502	235.544
S2	235.547	235.576
S3	235.554	235.571
S4	235.522	235.527

English → Metric

FIELD BOLT LIST							A325 Type 3 BOLTS						
LINE	NO. REQ'D.	BOLT DIAM.	BOLT LEN.	BOLTS /CONN.	# OF CONN.	GRIP	THICKNESS OF PCS. CONNECTED					WASH CODE	PIECES CONNECTED AND REMARKS
1		~~3/4~~ 7/8	~~5"~~ 2 1/4										**INT. DIAPHRAGMS**
2	72			4	18	23	10	13				1	DIAPHRAGM WEB TO CONN. PL.
3													

WASHER CODES

1: 1 Hard Flat Washer

FIELD BOLT SUMMARY				EXACT COUNT - NONE EXTRA		
LINE	NO. OF BOLTS	BOLT DIAM.	TYPE	BOLT LEN	ACTUAL COUNT	REMARKS
1	72	~~3/4~~ 7/8	A325 Type 3	~~5"~~ 2 1/4	72	
2						
3	72	Hard Flat Washers for 7/8 BOLT				F436-3
4						
5						
6						

NOTE:
FOR GENERAL NOTES SEE DRAWING GN1.

REV.	DATE	REMARKS	DWN	CHK	APVL	SHOP
⚠1	11/11	ADDED ANCHOR BOLT ASS'Y	ZAD	WJL	11-12-08	

MATERIAL: | SURFACE PREP. & PAINT: | HOLES: | SHOP BOLTS:

DESCRIPTION: FRAMING PLAN & FIELD BOLTS

CASCO BAY STEEL STRUCTURES, INC.
75 SPRING HILL ROAD SACO, MAINE 04072
PHONE (207) 282-7360 FAX. (207) 282-1179
TENSOR 2030

STRUCTURE:	ROUTE NO: TH 50, CL 3 BRIDGE NO: BR 34 COUNTY OF ORANGE	DRAWN: JTB	DATE: 10/14
		CHKD: DBH	DATE: 10/28
LOCATION:	TOWN OF CORINTH	JOB NO.	DWG NO.
PROJ NO.	STP BRO 1447(22) (RE-ADVERTISED)	380	E1
CUSTOMER:	VERMONT AOT		REV. ⚠1

NOV 17 2008
APPROVED
DATE
As Noted

ZAD Wed, Nov 12, 2008 09:54:44 AM /Users/jobs/2030/E1 : Rev1