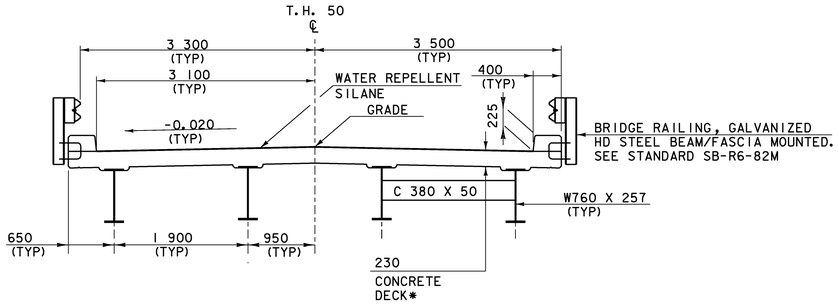

*SPECIAL PROVISION (HIGH PERFORMANCE CONCRETE, CLASS A LOW CEMENT)

TYPICAL BRIDGE SECTION

0 1 2 3 4

SCALE = 1:40

MATERIAL ITEM	TOLERANCE
AGGREGATE SURFACE COURSE	±10 mm
SUBBASE	±30 mm
SAND BORROW	±30 mm

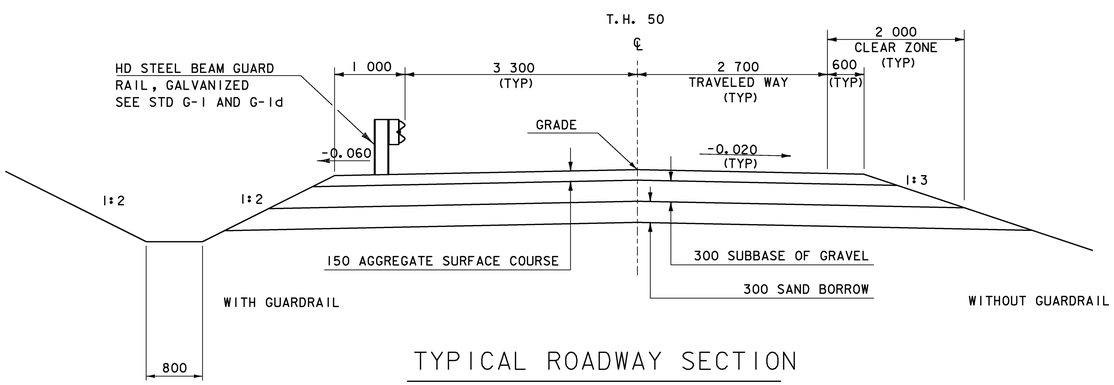

TYPICAL ROADWAY SECTION

0 1 2 3 4

SCALE = 1:40

FINAL HYDRAULICS REPORT

Metric

HYDROLOGIC DATA

DRAINAGE AREA= 93.8 sq. km
CHARACTER OF TERRAIN: Hilly to mountainous
CHARACTER & TYPE OF STREAM: Straight, probably incised and alluvial. Not braided or anabranched.
NATURE OF STREAMBED: mostly gravel with some sand and cobbles.

Q2.33= 32.6 cms Q50= 113.3 cms
Q10= 70.8 cms Q100= 130.3 cms
Q25= 94.3 cms Q500= 221.4 cms

DATE OF FLOOD OF RECORD: November 1927
WATER SURFACE ELEV.: Unknown ESTIMATED DISCHARGE: Unknown
NATURAL STREAM VELOCITY @ Q 25 = 3.0 mps
ICE CONDITIONS: Moderate DEBRIS: Moderate
DOES THE STREAM REACH MAXIMUM HIGHWATER ELEVATION RAPIDLY? Yes
IS ORDINARY RISE RAPID? Yes
IS STAGE AFFECTED BY UPSTREAM OR DOWNSTREAM CONDITIONS? No
IF YES, DESCRIBE.

WATERSHED STORAGE 2% HEADWATERS ___ UNIFORM THROUGHOUT WATERSHED X
IMMEDIATELY ABOVE SITE ___

EXISTING STRUCTURE

STRUCTURE TYPE: Single span steel truss bridge YEAR BUILT: 1954
CLEAR SPAN (NORMAL TO STREAM): 15.0 m
VERTICAL CLEARANCE ABOVE STREAMBED: 2.7 m
WATERWAY OF FULL OPENING: 31.8 sq. m
DISPOSITION OF STRUCTURE: Remove

TYPE OF MATERIAL UNDER SUBSTRUCTURE: Unknown

WATER SURFACE ELEV. @ Q2.33= 234.5 VELOCITY= 3.1 mps
Q10= 235.3 " 3.9 mps
Q25= 236.0 " 4.1 mps
Q50= 236.1 " 4.2 mps
Q100= 236.1 " 4.4 mps

LONG TERM STREAM BED CHANGES: There is a 0.3m to 1.2m deep scour hole through and downstream of the bridge.
IS THE ROADWAY OVERTOPPED BELOW THE Q100? Yes FREQUENCY: Q15
RELIEF ELEVATION: 235.6 DISCHARGE OVER ROAD @ Q100: 43.9 cms

UPSTREAM STRUCTURE: TOWN: Corinth DISTANCE: 1.6 km
HIGHWAY NO.: T.H. 60 STRUCTURE NO.: 33
STRUCTURE TYPE: CGMPPA
CLEAR SPAN: 6.7 m CLEAR HEIGHT: 3.0 m
YEAR BUILT: - FULL WATERWAY: -

DOWNSTREAM STRUCTURE: TOWN: Corinth DISTANCE: 1.6 km
HIGHWAY NO.: T.H. 40 STRUCTURE NO.: 37
STRUCTURE TYPE: Single span steel beam bridge with wood deck
CLEAR SPAN: 10.7 m CLEAR HEIGHT: 4.3 m
YEAR BUILT: - FULL WATERWAY: -

PROPOSED STRUCTURE

STRUCTURE TYPE: Steel beam single span bridge

CLEAR SPAN (NORMAL TO STREAM): 20.0 m
VERTICAL CLEARANCE ABOVE STREAMBED: 2.6 m
WATERWAY OF FULL OPENING: 43.0 sq. m

WATER SURFACE ELEV. @ Q2.33= 234.1 VELOCITY= 2.1 mps
Q10= 234.8 " = 2.8 mps
Q25= 235.1 " = 3.1 mps
Q50= 235.2 " = 3.4 mps
Q100= 235.3 " = 3.7 mps

IS THE ROADWAY OVERTOPPED BELOW THE Q100? No FREQUENCY: -
RELIEF ELEVATION: 235.6 DISCHARGE OVER ROAD @ Q100: None

AVERAGE LOW ELEVATION OF SUPERSTRUCTURE: 235.5
VERTICAL CLEARANCE @ Q25 = 0.4 m

SCOUR: 0.8 m of contraction scour at Q100 and Q500
REQUIRED CHANNEL PROTECTION: Stone Fill, Type II

PERMIT INFORMATION

AVERAGE DAILY FLOW: 2.1 cms
ORDINARY LOW WATER: 1.0 cms ELEV.: 233.0
ORDINARY HIGH WATER: 14.0 cms ELEV.: 233.8

DESIGN CRITERIA:
1. DESIGN LIVE LOAD AASHTO HL-93
2. DESIGN SPAN 21.5 m
3. ALLOWABLE LOAD FOR SPREAD FOOTINGS ON SOIL N/A ON LEDGE N/A
4. ALLOWABLE LOAD FOR PILING SEE GENERAL NOTES TYPE HP 310x93 ESTIMATED LENGTH 20.0 m
5. STRUCTURAL STEEL AASHTO GRADE 345W, M 270M/M 270
6. REINFORCING STEEL GRADE 420
7. CONCRETE CLASS A f'_c : 30 MPa SPECIAL PROVISION (HIGH PERFORMANCE CONCRETE, CLASS A LOW CEMENT).
CONCRETE CLASS B f'_c : 25 MPa CONCRETE, HIGH PERFORMANCE CLASS B.
SILICA-FUME CONCRETE f'_c : 35 MPa N/A

TRAFFIC MAINTENANCE:
1. IS TRAFFIC TO BE MAINTAINED? NO IF YES, ON EXISTING STRUCTURE NA OR ON TEMPORARY BRIDGE NA
2. TEMPORARY BRIDGE REQUIREMENTS: ONE OR TWO WAY ------ TRAFFIC CONTROL SIGNALS REQUIRED ------
MINIMUM CLEAR SPAN (NORMAL TO STREAM): ------ VERTICAL CLEARANCE ABOVE STREAMBED: ------
WATERWAY OF FULL OPENING: ------
ARE SIDEWALKS REQUIRED? ------ IF SO, ON WHAT SIDE? ------
STRUCTURE TYPE: Road will be closed during construction.

LOAD FACTOR LOAD RATING (TONNES)

LOADING LEVELS (LOAD FACTOR)	TRUCK						
	M	MS	3S2	6 AXLE	3A.STR.	4A.STR.	5A.SEMI
INVENTORY A = 2.17 B = 1.00	51	64					
POSTED A = 1.55 B = 1.40	71	89	113		83	85	102
OPERATING A = 1.30 B = 1.67		107	135	164	99	102	

STRENGTH $RF = \frac{\phi M_N - 1.3 M_{DL}}{A \times M_{LL+I}}$

SERVICEABILITY $RF = B\left[\frac{.95 F_Y S_{LL+I} - M_{DL}\frac{S_{LL+I}}{S_{DL}} - M_{SDL}\frac{S_{LL+I}}{S_{SDL}}}{1.67 M_{LL+I}}\right]$

TRAFFIC DATA

YEAR	ADT	DHV	% D	% T	ADTT
1996	100	15	--	2	2
2016	130	20	--	2	2

20 year ESAL for flexible pavement from ---- to ----: N.A.
40 year ESAL for flexible pavement from ---- to ----: N.A.
Design speed: 50 km/h

STATE OF VERMONT
AGENCY OF TRANSPORTATION

Town Of CORINTH	Bridge No. 34
Highway No. T.H.50	Log Sta. 3971.405
	Surv. Sta.

PRELIMINARY INFORMATION

T.H.50 OVER SO.BRANCH OF WAITS RIVER

Designed By T.A.SUMNER	Drawn By T.A.SUMNER
Checked By W.B.SYMONDS Date 10/97	Bridge Design Supervisor C.P.WILLIAMS Date 10/97
PROJECT CORINTH	PROJECT NO. STP BRO 1447(22) RE-ADVERTISED
I.G.C. Info. M:\Projects\93J042\Structures\sJ042pl.dgn	sJ042pl21
Bridge Sheet No.	Sheet 2 of 42