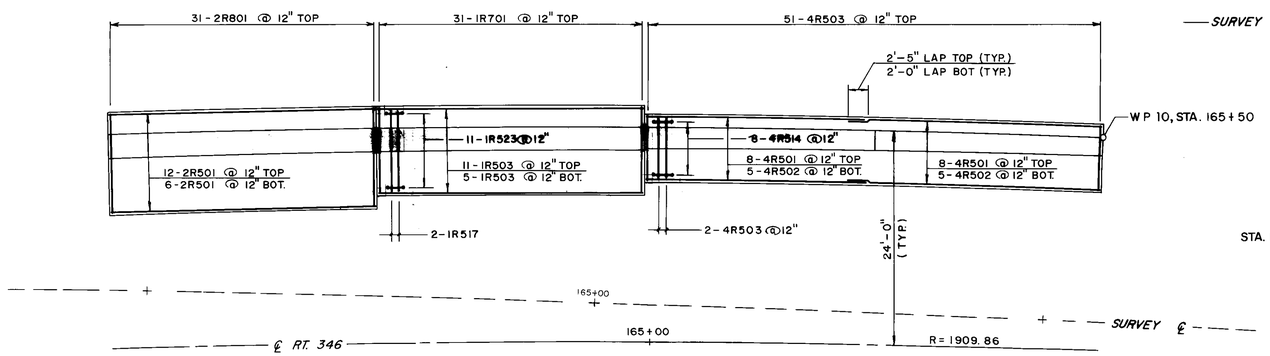

FOOTING REINFORCING PLAN

SCALE: 1/8" = 1'-0"

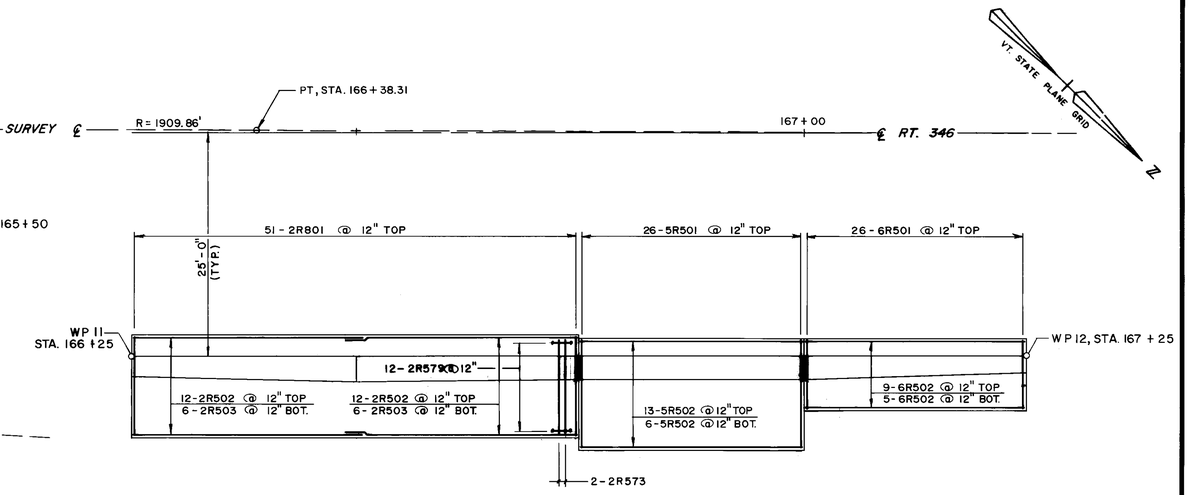

FOOTING REINFORCING PLAN

SCALE: 1/8" = 1'-0"

MATCH LINE STA. 164+40
SEE SHT. 155

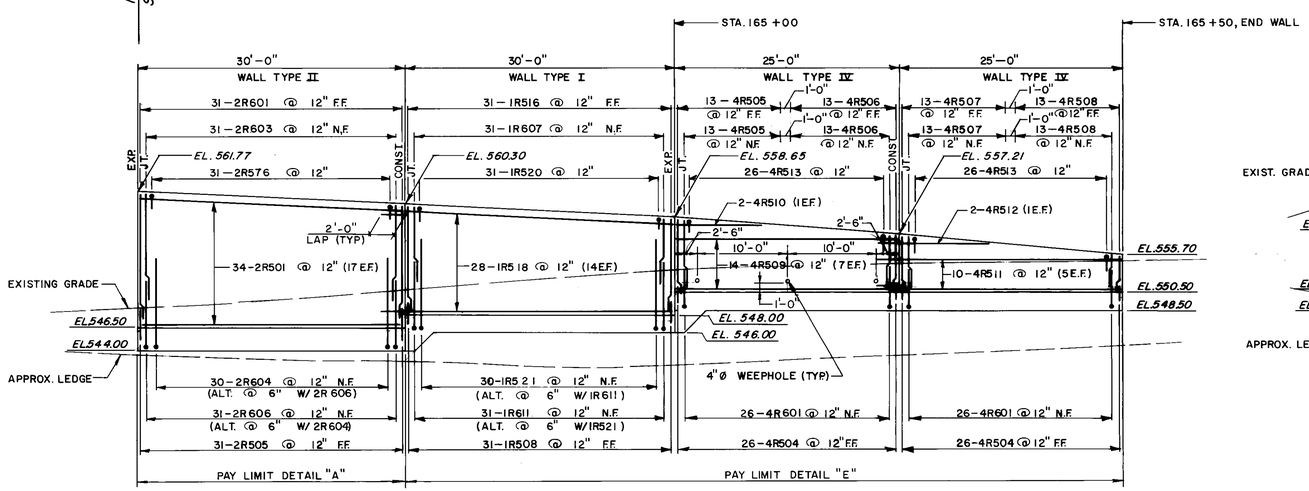

ELEVATION (VIEW FACING SOUTH)

SCALE: 1/8" = 1'-0"

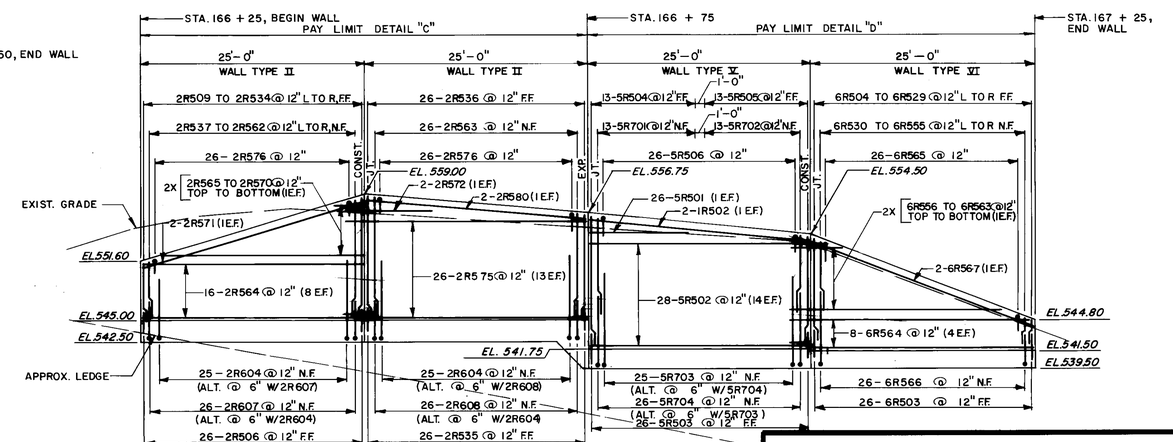

ELEVATION (VIEW FACING SOUTH)

SCALE: 1/8" = 1'-0"

NOTES

1. FOR WALL TYPE SECTIONS, SEE SHT. 158
2. FOR PAY LIMIT DETAILS, SEE SHT. 157 & 159
3. FOR EXPANSION AND CONTRACTION JOINT DETAILS, SEE SHT. 154
4. FOR BORING LOCATIONS & BORING LOGS, SEE SHTS. 168 & 169
5. HORIZONTAL DIMENSIONS ON PLAN VIEW ARE GIVEN RADIAL TO ℄ RT. 346 (STA. 164 + 40 TO 166 + 38.31) AND NORMAL TO ℄ RT. 346. (STA. 166 + 38.31 TO 167 + 25)
6. HORIZONTAL DIMENSIONS ON ELEVATION VIEW ARE GIVEN ALONG TOP OF WALL AND ARE CONCENTRIC WITH ℄ RT. 346 (STA. 164 + 40 TO 166 + 38.31) AND PARALLEL TO ℄ RT. 346 (STA. 166 + 38.31 TO 167 + 25).
7. N.F. = NEAR FACE
   F.F. = FAR FACE
   E.F. = EACH FACE
8. FOR FOOTING STEP DETAIL, SEE SHT. 155

PARE ENGINEERING CORPORATION
Engineers — Planners — Landscape Architects
8 Blackstone Valley Place, Lincoln, RI 02865
401/334/4100

STATE OF VERMONT
AGENCY OF TRANSPORTATION

Town Of POWNAL	Bridge No.
Highway No. ROUTE 346	Log Sta. / Surv. Sta.
CONCRETE RETAINING WALL	
STA.164+40 TO 165+50, STA.166+25 TO 167+25	
Designed By J.S.J.	Drawn By K.M.B.
Checked By Date	Bridge Design Supervisor Date
PROJECT POWNAL	PROJECT NO. RS0107 (7)
L.G.C. Info.	
Bridge Sheet No.	Sheet 156 of 319

BRUNING 44-232 54442

BR-6