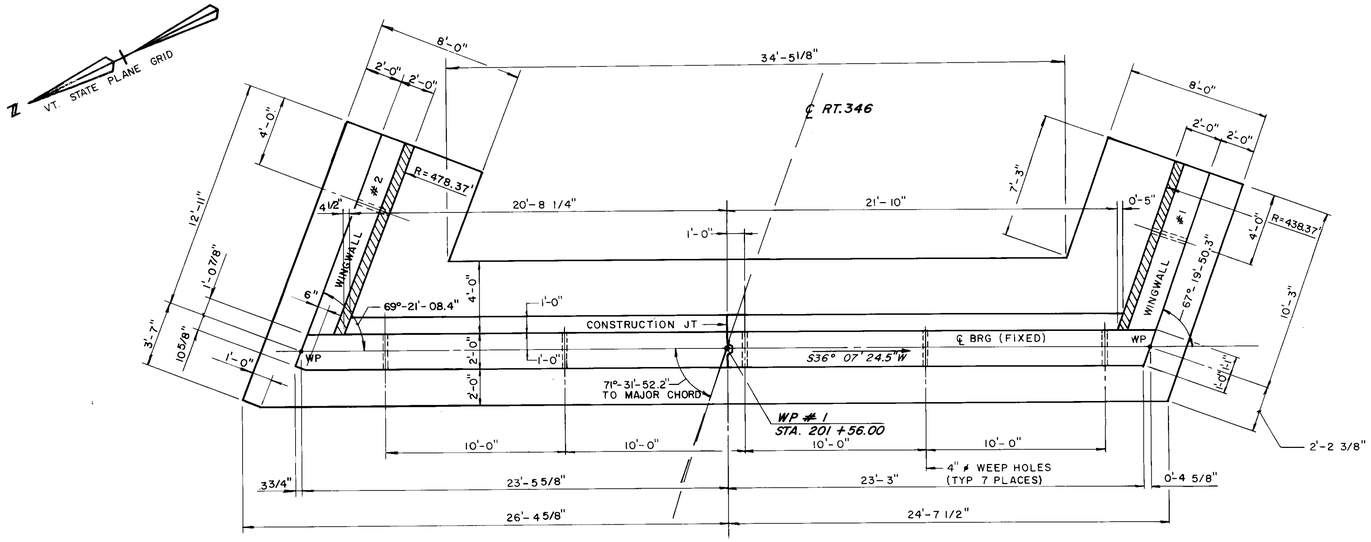

PLAN - ABUTMENT NO.1

SCALE: 1/4" = 1'-0"

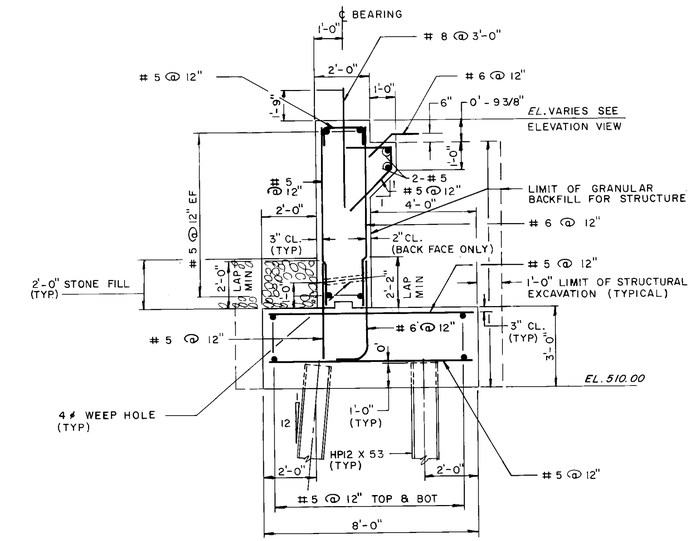

TYPICAL ABUTMENT SECTION

SCALE: 3/8 = 1'-0"

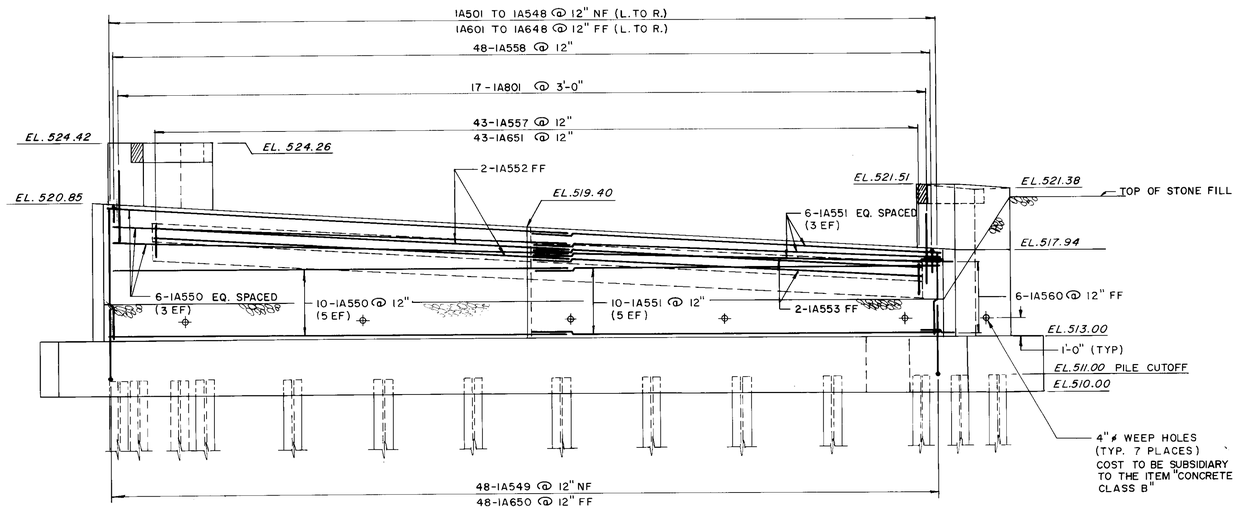

ELEVATION - ABUTMENT NO.1

SCALE: 1/4" = 1'-0"

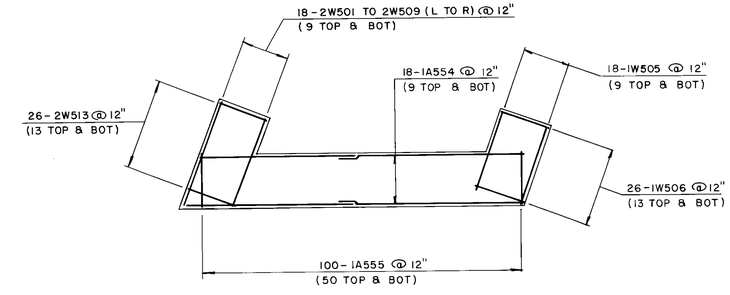

FOOTING REINFORCING PLAN ABUTMENT NO.1

NOT TO SCALE

NOTES:

1. WEEPHOLES ARE TO BE SLOPED 1/4" PER FOOT TOWARD THE FRONT FACE OF THE WALL, AND ARE TO BE FORMED BY 4" DIAMETER PVC PIPE.
2. WATER REPELLENT IS TO BE APPLIED TO ALL EXPOSED CONCRETE SURFACES.
3. FOR CONSTRUCTION JOINT DETAILS SEE VT. STD. SHEET SCB-D6-73.
4. N.F. = NEAR FACE
   F.F. = FAR FACE
   E.F. = EACH FACE

PARE ENGINEERING CORPORATION
Engineers Planners Landscape Architects
8 Blackstone Valley Place, Lincoln, RI 02865
401.334.4100

STATE OF VERMONT
AGENCY OF TRANSPORTATION

Town Of	POWNAL	Bridge No.	6
		Log Sta.	
Highway No.	ROUTE 346	Surv. Sta.	201 + 74
ABUTMENT No.1 DETAILS			
Designed By J.S.J.		Drawn By R.J.H.	
Checked By P.D.M.	Date	Bridge Design Supervisor	Date
PROJECT	POWNAL	PROJECT NO.	RS0107(7)
L.G.C. Info.			
Bridge Sheet No. BR 607		Sheet 144 of 319	