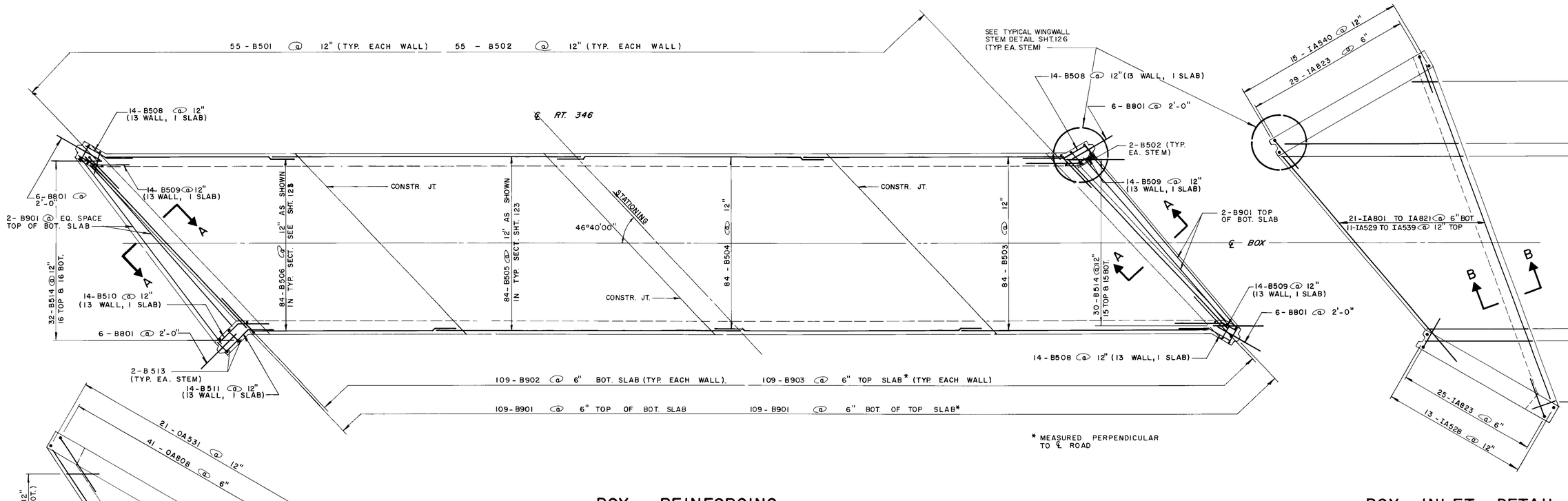

BOX REINFORCING

SCALE: 1/4" = 1'-0"

BOX INLET DETAIL

SCALE: 1/4" = 1'-0"

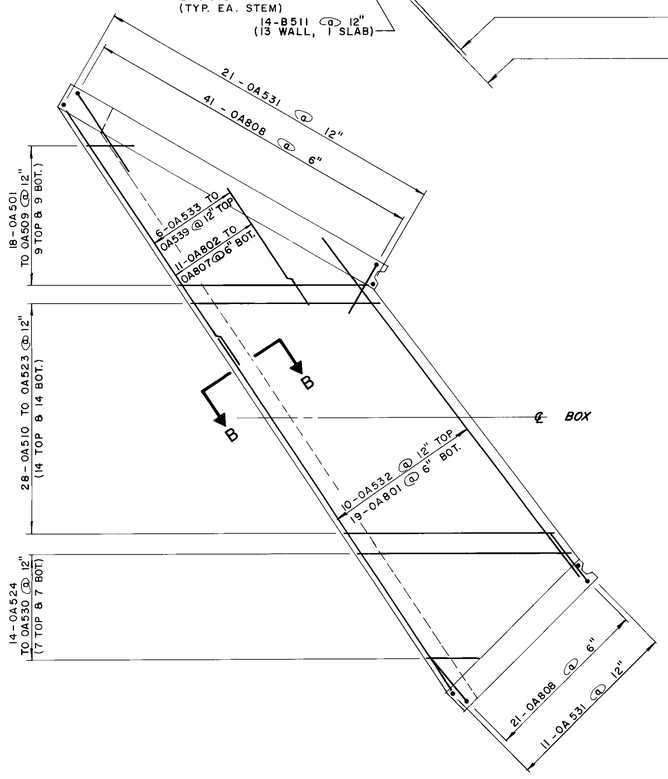

BOX OUTLET DETAIL

SCALE: 1/4" = 1'-0"

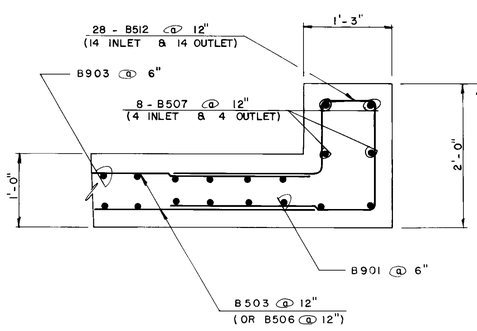

HEAD WALL SECTION A - A

SCALE: 1" = 1'-0"

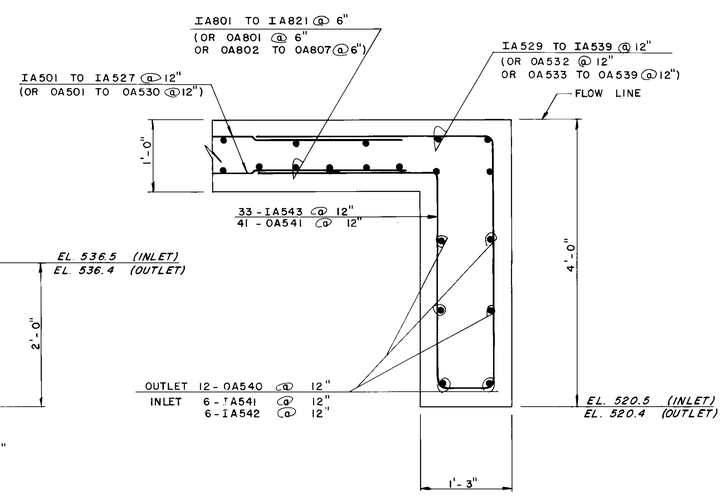

CUTOFF WALL SECTION B - B

SCALE: 1" = 1'-0"

PARE ENGINEERING CORPORATION
Engineers Planners Landscape Architects
11 Blackstone Valley Place Lincoln RI 02865
401 334 4100

STATE OF VERMONT
AGENCY OF TRANSPORTATION

Town Of POWNAL	Bridge No. 5
	Log Sta.
Highway No. ROUTE 346	Surv. Sta. 121+88
12'-6" x 10'-0" CONCRETE BOX CULVERT	
REINFORCING DETAILS	
Designed By R.T.P.	Drawn By R.S.
Checked By P.D.M. Date 2/10/87	Bridge Design Supervisor Date
PROJECT POWNAL	PROJECT NO. RS 0107 (7)
L.G.C. Info.	
Bridge Sheet No. BR 502	Sheet 125 of 319