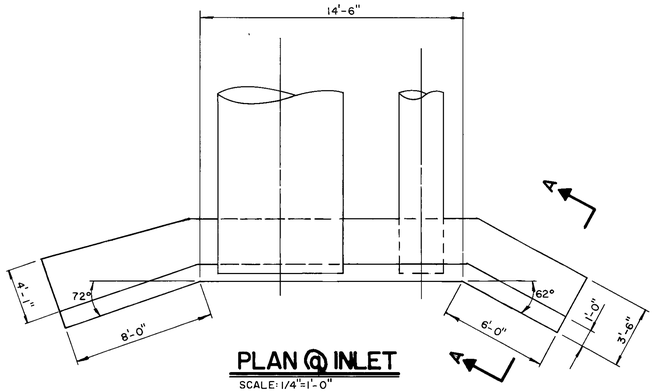

PLAN @ INLET

SCALE: 1/4"=1'-0"

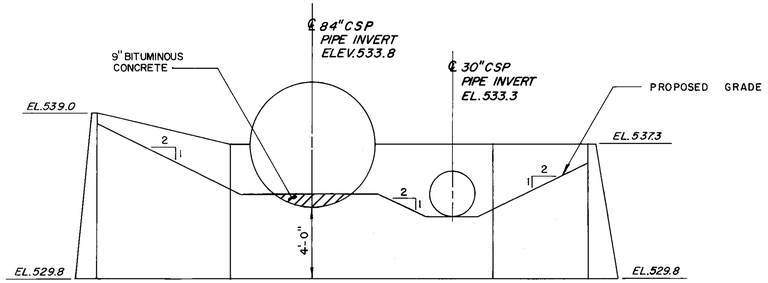

ELEVATION @ INLET

SCALE: 1/4"=1'-0"

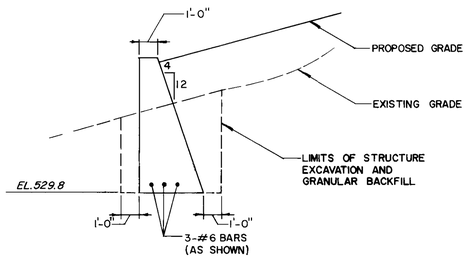

SECTION A-A

SCALE: 1/4"=1'-0"

ESTIMATED QUANTITIES

NO.	ITEM	UNIT	TOTAL	FINAL
203.27	UNCLASSIFIED CHANNEL EXCAV.	CY	250	
203.32	GRANULAR BORROW	CY	337	
204.25	STRUCTURE EXCAVATION	CY	535	
204.30	GRANULAR BACKFILL for STRUCTURE	CY	132	
501.25	CONCRETE CLASS "B"	CY	35	
507.15	REINFORCING STEEL	LBS	244	
514.10	WATER REPELLANT	GAL	1	
* 529.25	REMOVAL OF EXISTING CONCRETE OR MASONRY	CY	10	
601.0236	30"ø CAAP	LF	90	
601.0436	30"ø PCCSP	LF	90	
601.0352	84"ø CAAP	LF	90	
601.0152	84"ø PCCSP	LF	90	
613.10	STONE FILL TYPE I	CY	150	
613.11	STONE FILL TYPE II	CY	120	
616.47	BITUMINOUS CONC. GUTTERS & TRAFFIC ISLAND	TON	15	

* THE PORTION OF THE EXISTING STRUCTURE OUTSIDE THE LIMITS OF "STRUCTURE EXCAVATION" SHALL BE REMOVED UNDER THE ITEM "REMOVAL OF EXISTING CONCRETE OR MASONRY".

NOTES

1. ALL MATERIALS AND CONSTRUCTION SHALL CONFORM TO THE VERMONT AGENCY OF TRANSPORTATION STANDARD SPECIFICATIONS FOR CONSTRUCTION DATED 1986, AND THE LATEST A.A.S.H.T.O. STANDARD SPECIFICATIONS FOR HIGHWAY BRIDGES. DESIGN IS FOR HS-25 LIVE LOADING.
2. UNLESS OTHERWISE INDICATED FOUR (4) BOLTS PER LINEAR FOOT FOR STEEL PLATES AND FIVE AND ONE THIRD (5 1/3) BOLTS FOR ALUMINUM PLATES ARE REQUIRED ALONG THE LONGITUDINAL SEAMS. ALL CONNECTIONS FOR STRUCTURAL PLATE SECTIONS SHALL BE MADE WITH GALVANIZED ASTM A-449 BOLTS.
3. WHEN NORMAL CONSTRUCTION OR REGULAR ROADWAY TRAFFIC IS MAINTAINED OVER THE PIPE THE CONTRACTOR SHALL MAINTAIN A MINIMUM COVER OF 3 FEET OF COMPACTED MATERIAL.
4. ALUMINUM PIPE THAT IS TO BE IN CONTACT WITH CONCRETE SHALL HAVE CONTACT SURFACES THOROUGHLY COATED WITH ZINC CHROMATE, OR BITUMINOUS, OR ASPHALTIC PAINT.
5. PIPES SHALL BE FACTORY ELONGATED 5% (PIPE ARCHES SHALL NOT BE ELONGATED).
6. THE ENDS OF THE PIPE SHALL BE CUT SQUARE (NOT BEVELED TO MATCH SLOPES).
7. AT THE OUTLET END INCLUDE A 10 FOOT PIECE OF 6" UNDERDRAIN EACH SIDE ON SAME GRADIENT AS CULVERT CONFORMING TO SECTION 711.07. COST TO BE INCLUDED IN UNIT PRICE BID FOR THE CULVERT PIPE.

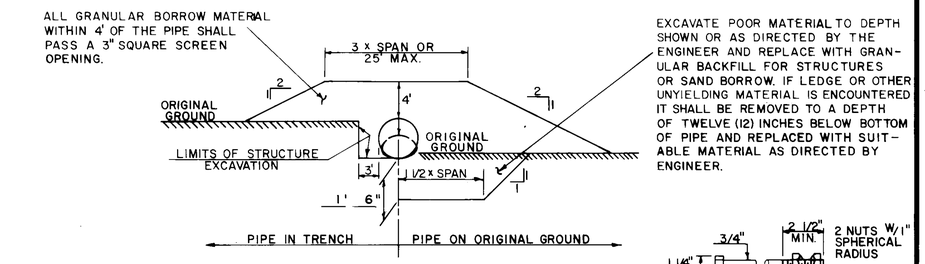

TYPICAL BACKFILL SECTION

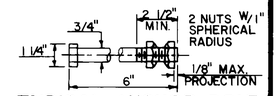

TYPICAL ANCHOR BOLT

BOLT MATERIAL SHALL CONFORM TO ASTM-A307 & NUTS TO ASTM-A563.

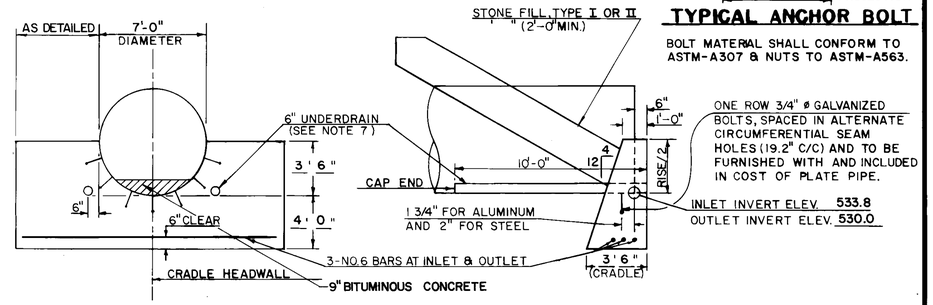

OUTLET HEADWALL DETAILS

REINFORCING STEEL SCHEDULE

NO. PIECES	SIZE	LENGTH	MARK	TYPE	
3	6	30'-0"	HW601	STR	CUT TO FIT IN THE FIELD
3	6	24'-0"	HW602	STR	CUT TO FIT IN THE FIELD

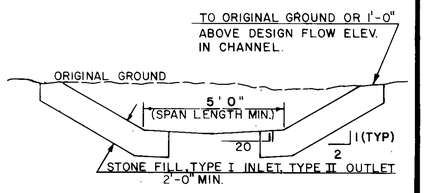

TYPICAL CHANNEL SECTION

ESTIMATED QUANTITIES

NO.	ITEM	UNIT	TOTAL	FINAL

PARE ENGINEERING CORPORATION
Engineers — Planners — Landscape Architects
8 Blackstone Valley Place, Lincoln, RI 02865
401/334/4100

HYDRAULIC DATA

DRAINAGE AREA = 0.33 SQ. MI. DESIGN FLOW Q 50

Q_{10} = 82 C.F.S.		Q_{10} HEADWATER ELEVATION =	536.27
Q_{25} = 103 C.F.S.		Q_{25} HEADWATER ELEVATION =	536.66
Q_{50} = 121 C.F.S.		Q_{50} HEADWATER ELEVATION =	536.93
Q_{100} = 137 C.F.S.*		Q_{100} HEADWATER ELEVATION =	537.36

TAILWATER DEPTH AT Q 50 = 1.60 FEET, ELEVATION 530.86

OUTLET VELOCITY AT Q 50 = 12.51 FEET PER SECOND

ORDINARY HIGHWATER DEPTH —— FEET

COMMENTS:

DETAILS OF STRUCTURAL PLATE PIPE CULVERTS

	STEEL	STEEL	ALUMINUM
CORRUGATIONS		3"x 1"	3"x 1"
SIZE OF PIPE OR PIPE ARCH		84"ø x 90 PCCSP	84"ø x 90 CAAP
WATERWAY AREA (S.F.)		37	37
PLATE THICKNESS (COATED)		0.138"	0.100"
BOLT SIZE			
WEIGHT PER LINEAR FOOT			
TOTAL WEIGHT			
LENGTH		90 FT.	90 FT.

STATE OF VERMONT
AGENCY OF TRANSPORTATION

TOWN OF POWNAL	Bridge No. 3
	Log Sta.
HIGHWAY NO. ROUTE 346	Surv. Sta. 87+51

84"Ø STEEL PIPE CULVERT DETAIL
HEADWALLS AND WINGWALLS

Designed by G.F.	Drawn by K.B.
Checked by P.D.M. date 2/10/87	Bridge Design Supervisor date
PROJECT POWNAL	PROJECT NO. RS0107 (7)
Bridge Sheet No.	Sheet 113 of 319

REV. 12/11/85