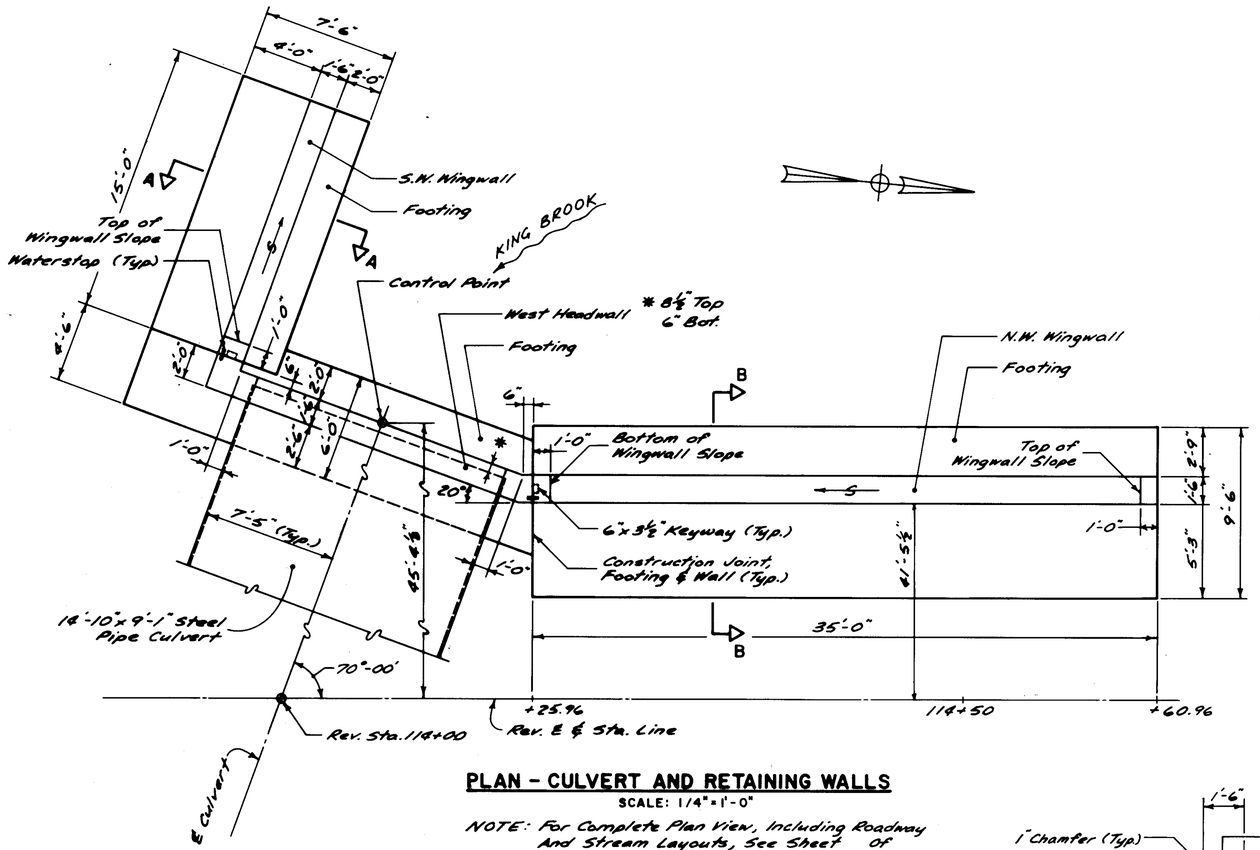

PLAN - CULVERT AND RETAINING WALLS

SCALE: 1/4" = 1'-0"

NOTE: For Complete Plan View, Including Roadway And Stream Layouts, See Sheet Of

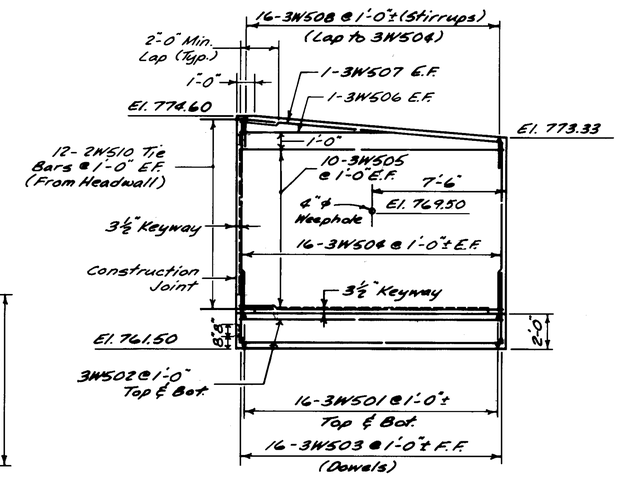

S.W. WINGWALL ELEVATION

SCALE: 1/4" = 1'-0"

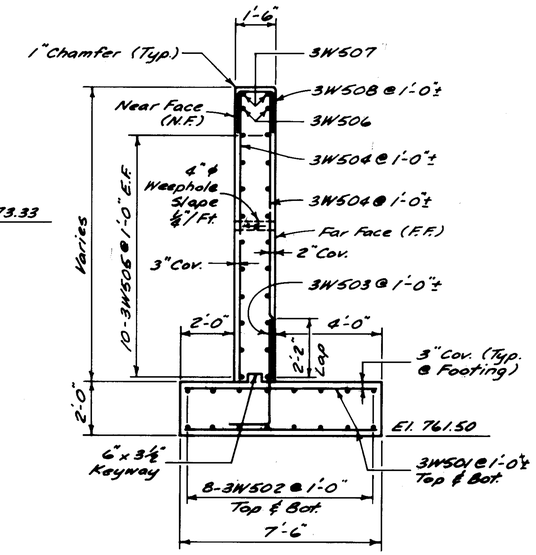

SECTION A-A

SCALE: 3/8" = 1'-0"

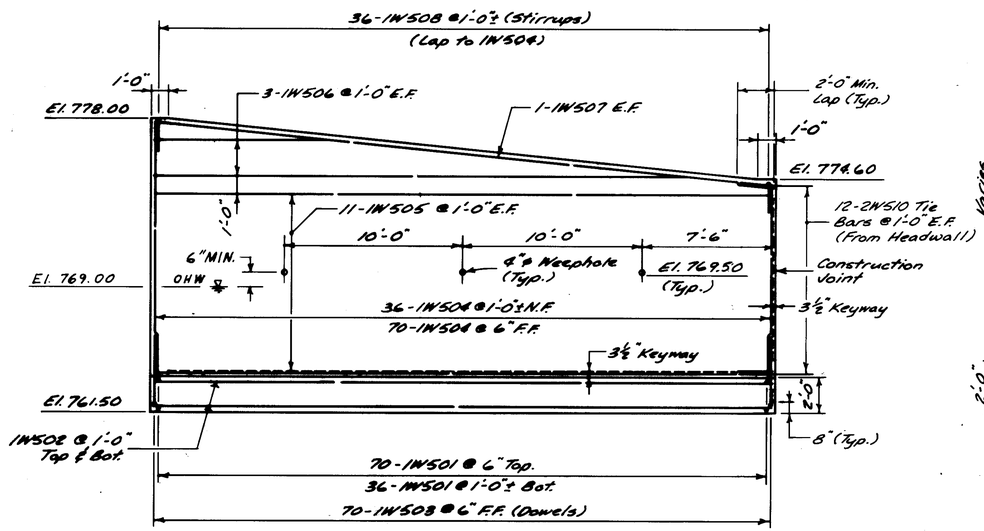

N.W. WINGWALL ELEVATION

SCALE: 1/4" = 1'-0"

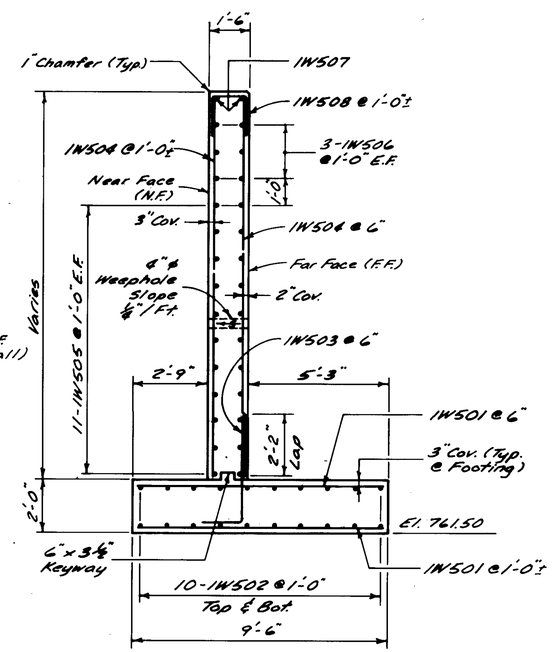

SECTION B-B

SCALE: 3/8" = 1'-0"

ESTIMATED QUANTITIES

NO.	ITEM	UNIT	TOTAL	FINAL
204.25	STRUCTURE EXCAVATION	CY	1,410	
204.30	GRANULAR BACKFILL FOR STRUCTURES	CY	300	
501.25	CONCRETE, CLASS B	CY	83	
505.36	TEMPORARY STEEL SHEET PILING	SF	2,470	
507.15	REINFORCING STEEL	LBS	7,856	
649.10	GEOTEXTILE FABRIC FOR FILTERS	SY	354	

GENERAL NOTE:
All Keyways Shall Terminate 1'-0"± From Edges Of Pour, Unless Otherwise Indicated.

KING BROOK - BR-100

VT. SURVEY
SURVEYED BY CONSULTANTS DATE 3/87
DRAWN BY BRYANT ASSOC. DATE 11/90
TRACED BY _____ DATE _____

U.S. ROUTE 2 - MARSHFIELD

PROJ. NO. FEGC F028-3(28)

SHEET 330 OF 352