TYPICAL SECTIONS

MATERIAL ITEM	THICKNESS TOLERANCE
PAVEMENT (TOTAL DEPTH)	±1/4"
SUBBASE	±1"
SAND BORROW	±1"

3-1/2"	BITUMINOUS CONCRETE PAVEMENT (1-1/2" TYPE II, 2" TYPE II)	406.25
3"	BASE COURSE, BITMINOUS CONCRETE, TYPE I (SINGLE LIFT)	406.25
32"	SUBBASE OF DENSE GRADED CRUSHED STONE	301.35
18"	SAND BORROW	203.31
SHOULDER 1-1/2"	BITUMINOUS CONCRETE PAVEMENT, TYPE III	406.25

NOTES

1. ALL SLOPES STEEPER THAN 1-2 SHALL HAVE STONE FILL FOR STABILZATION, TYPE II, 2'-0" DEPTH WITH 6" - 12" GRUBBING MATERIAL ON STONE FILL.

2. V-DITCH EROSION CONTROL: STONE FILL TYPE I SHALL BE PLACED AT LOCATIONS AS INDICATED ON THE PLANS. IN AREAS WHERE THE V-DITCH OCCURS WITHIN ROCK EXCAVATION, STONE FILL TYPE I SHALL BE PLACED IN DEFICIENT SECTIONS AS DIRECTED BY THE V.A.O.T.

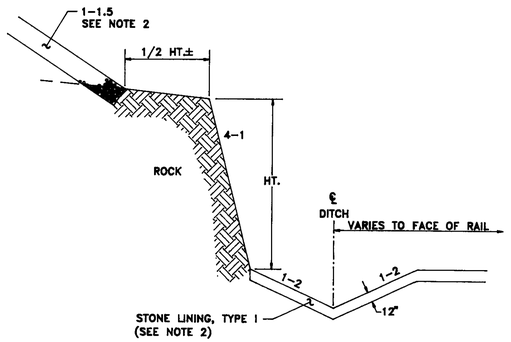

DETAILS OF DITCH AND BACKSLOPE
STATION 85+75 TO STATION 89+75
N.T.S.

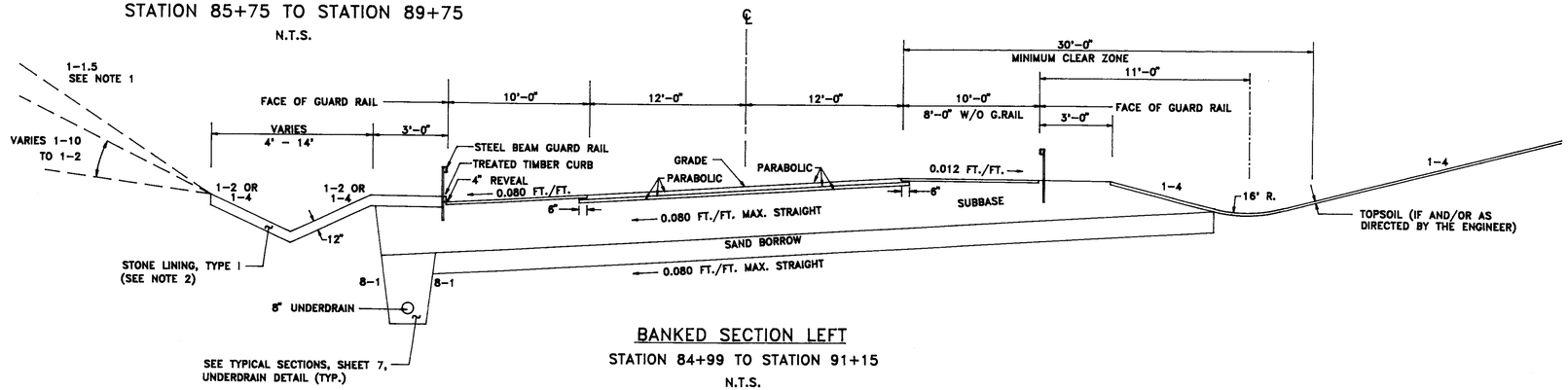

BANKED SECTION LEFT
STATION 84+99 TO STATION 91+15
N.T.S.

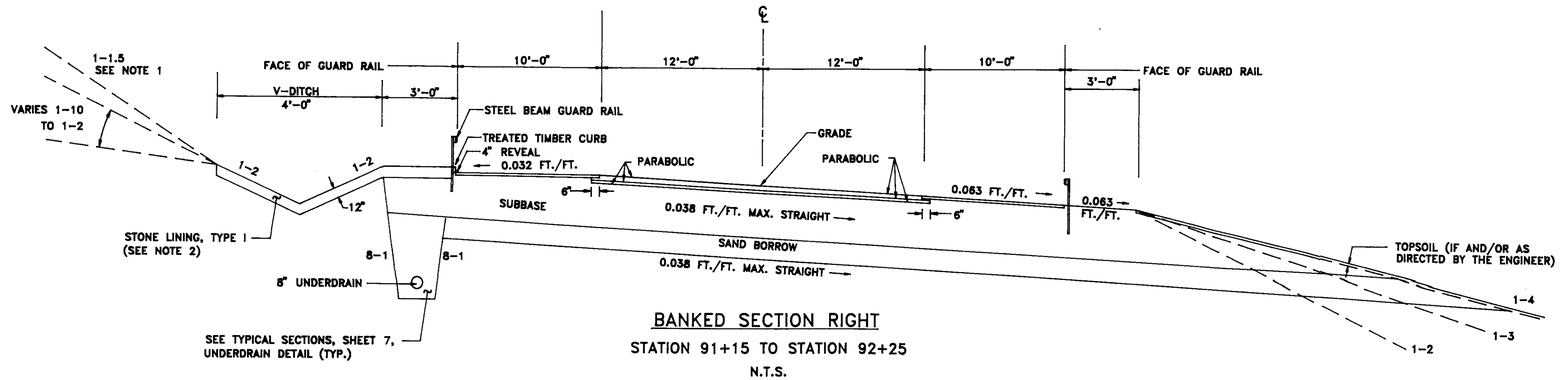

BANKED SECTION RIGHT
STATION 91+15 TO STATION 92+25
N.T.S.

VT. SURVEY
SURVEYED BY CONSULTANTS DATE AUG.,1986
DRAWN BY BRYANT ASSOC.,P.C. DATE MAY, 1987
TRACED BY _____ DATE _____

U.S. ROUTE 2
MARSHFIELD

PROJ. FEGC NO. F028-3(28)

SHEET 4 OF