# MAILBOX SUPPORT HARDWARE

(DOUBLE SUPPORT)
WATERBURY M.M. I.07 RT.

(COMPILED FROM "A GUIDE FOR ERECTING MAILBOXES ON HIGHWAYS" AASHTO, 1985)

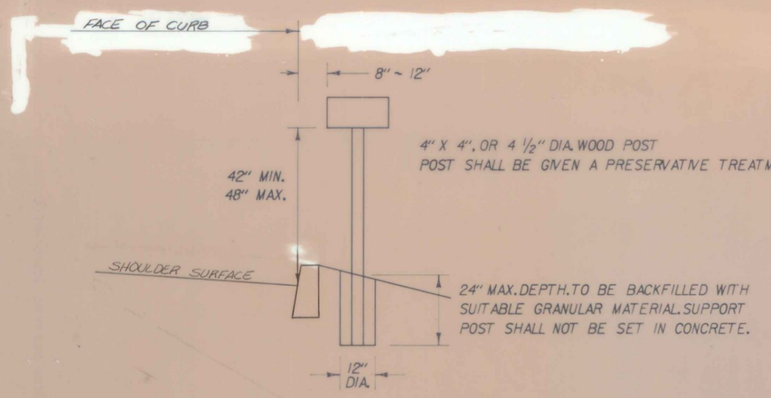


NOTES

1. ONLY LIGHTWEIGHT MAILBOXES MADE OF LIGHT SHEET METAL OR PLASTIC SHALL BE USED. MAILBOXES SHALL MEET REQUIREMENTS AND APPROVAL OF THE U.S. POSTAL SERVICE.
2. AN ALTERNATE MAILBOX SUPPORT STRUCTURE DESIGN AND CONSTRUCTION MAY BE USED AS LONG AS PROVEN CRASHWORTHY AND MEETS GUIDELINES AS SET OUT IN AASHTO'S "GUIDE FOR ERECTING MAILBOXES ON HIGHWAYS". SUPPORT STRUCTURE SHALL ALSO MEET REQUIREMENTS OF THE U.S. POSTAL SERVICE.
3. THE MINIMUM ALLOWABLE DISTANCE BETWEEN SUCESSIVE MAILBOX SUPPORTS SHALL BE THREE FEET.
4. MAILBOX SUPPORTS OF 4X4" WOOD, 4 1/2" DIA. WOOD OR 2" STEEL OR ALUMINUM ARE ALL ALLOWABLE ALTERNATES.

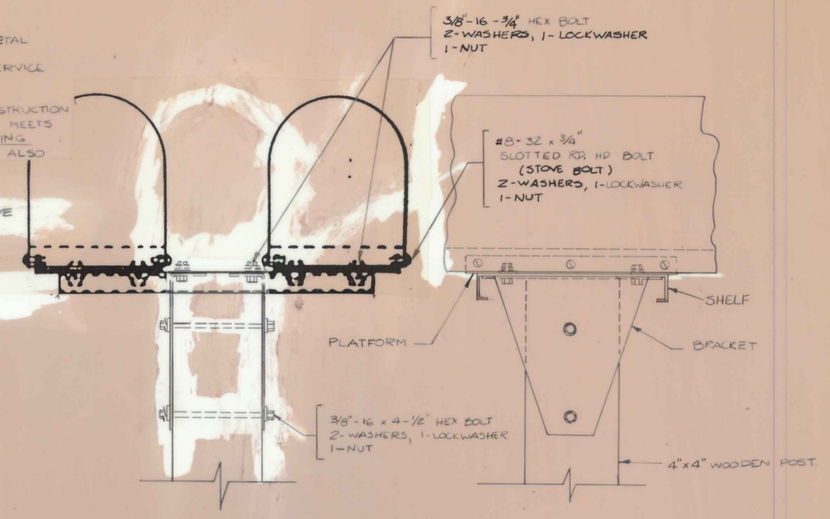


MAILBOX ASSEMBLY

N.T.S.

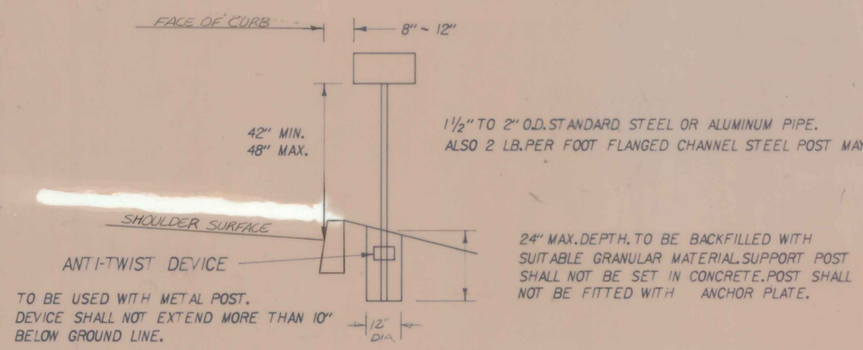


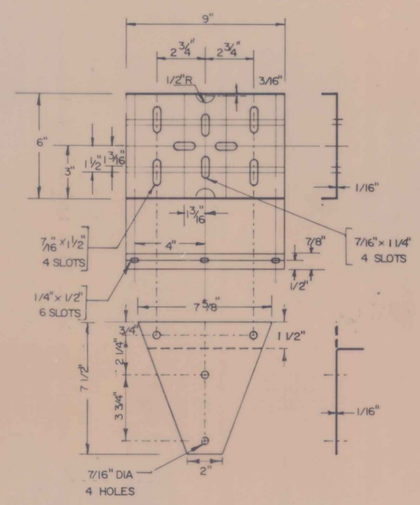


PLATFORM & BRACKET DETAIL

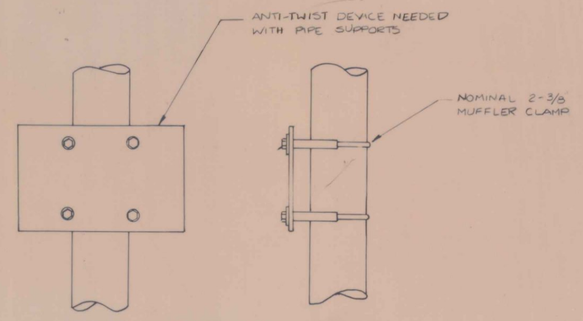


ANTI-TWIST DEVICE ASSEMBLY

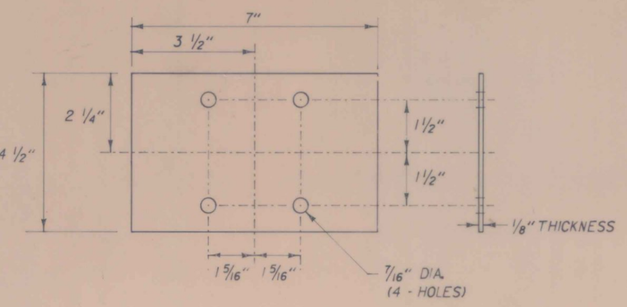


ANTI-TWIST DEVICE DETAIL

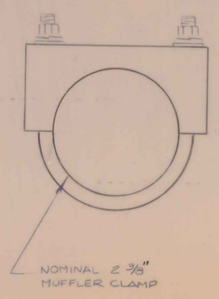


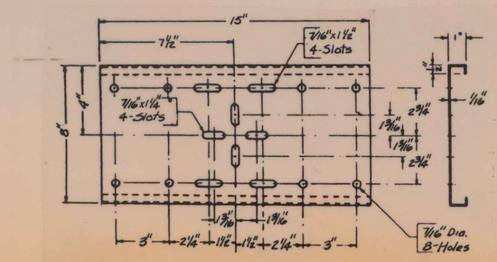


SHELF DETAIL

DATUM
VERTICAL _____
HORIZONTAL _____

SURVEYED BY _____ DATE _____
DRAWN BY _____ DATE _____
TRACED BY _____ DATE _____

1986 PAVING PROGRAM-
DISTRICT 6

SHEET 13 OF 108

BRUNING 53428.3

07