ABM INFO PAGE	LINE	NO.	DESCRIPTION	FT	IN	ASSEM. MARK	SHIPPING MARK	REMARKS	WEIGHT
			SHOP BILL					JOB NO. 198	DRG. NO. M1
		2	TS 8 x 8 x 3/8	3	7		DS1	ASTM A-500 or A-501	
			2 PL 3/8 x 11 1/4	1	3	p1			
			4 PL 3/8 x 7 3/8	1	3 3/8	p2		BEND	
			2 PL 3/8 x 3		11 1/4	p3			
			2 L 6 x 4 x 1/2		6	k1			
		2	L 3 x 3 x 3/8	3	6		TA1		
			2 PL 3/8 x 9		9	p4			
		4	3/8" Exp HILTI HY-150 SYSTEM (GALV. PER SUBSECT 506.15)		8		FIELD	HILTI INC.	
			PAY ITEM 506.60						

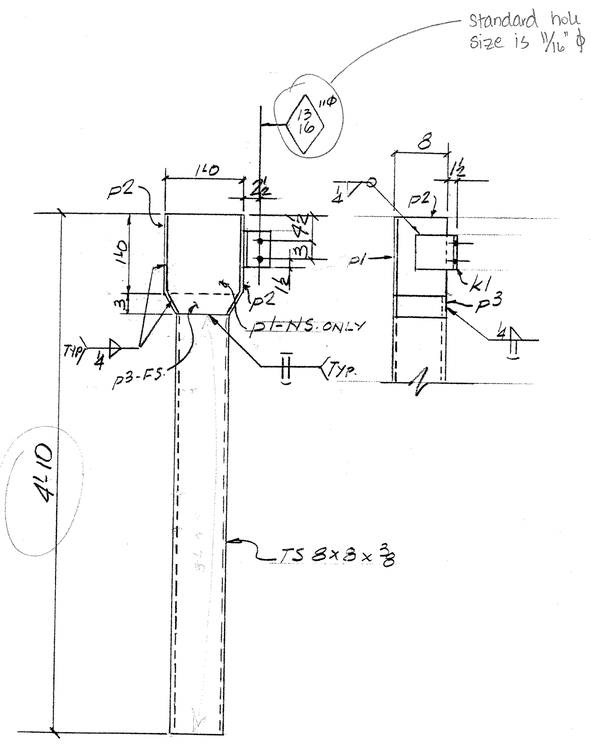

DS1 - 2 - REQ'D.

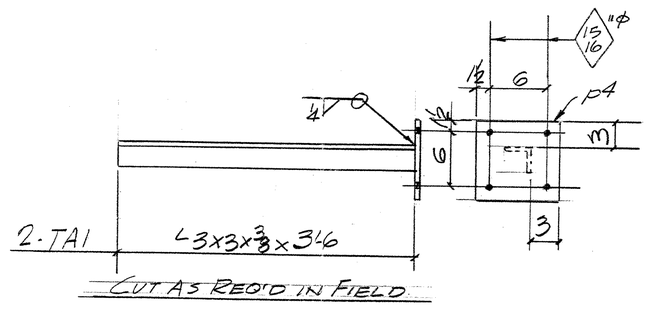

CUT AS REQ'D IN FIELD

VENDOR SUBMITTAL REVIEW

REVIEW STATUS	CONTRACTOR ACTION
APPROVED	NONE
APPROVED AS REVISED	CONFIRM
REJECTED	RESUBMIT

REVIEW IS FOR GENERAL CONFORMANCE WITH THE DESIGN CONCEPT AND CONTRACT DOCUMENTS. MARKINGS OF COMMENTS SHALL NOT BE CONSTRUED AS RELIEVING THE CONTRACTOR FROM COMPLIANCE WITH THE PROJECT PLANS AND SPECIFICATIONS NOR DEPARTURES THEREFROM. THE CONTRACTOR REMAINS RESPONSIBLE FOR DETAILS AND QUANTITIES AND DIMENSIONS, FOR SELECTING FABRICATION PROCESSES FOR TECHNIQUES OF ASSEMBLY AND FOR PERFORMING HIS WORK IN A SAFE MANNER.

BY Martha Klein DATE 7/15/03

REV.	REMARKS	DATE	DWN	CHK	APP	Q.A.	NO.	DIA.	LGT	TYPE	WASHER
	OUT FOR APPROVAL	6-24-03									
	OUT FOR APPROVAL										
	ISSUED TO SHOP										
	FIELD & OFFICE										

PROJECT NO. IM-091-1(36) STATE BRIDGE NO. 38

MATERIAL AASHTO M270 Gr 36 | ELECTRODES: PER PROC | HOLES: AS NOTED | SHOP BOLTS: —

SURFACE PREP. & PAINT:

GALV. AFTER FAB (ASTM-A123)

DESCRIPTION: DOWNSPOUTS PIERS 1 & 4

JOB: US ROUTE 5 OVER I-91 HARTLAND, VT.

CUSTOMER: F.W. WHITCOMB

	DRAWN BY	DATE
	JPF	6-03
	CHKD BY	
	EJ	
	APPROV BY	
	Q.A.	

CASCO BAY STEEL STRUCTURES, INC.
75 SPRING HILL ROAD SACO, MAINE 04072
PHONE (207) 282-7360 FAX. (207) 282-1179

JOB NO.	DRG. NO.
198	M1
095	REV. △