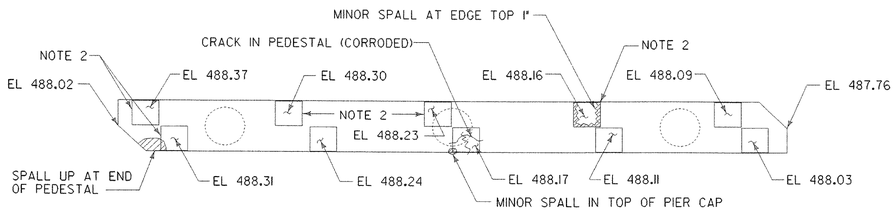

PIER I CAP PLAN - TOP

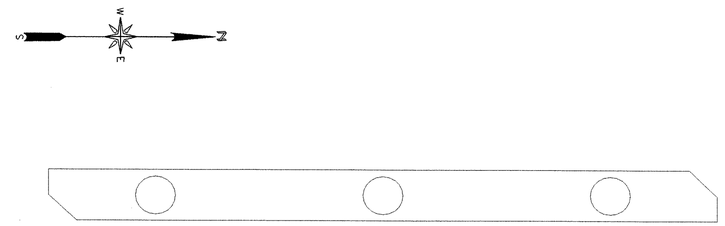

PIER I CAP PLAN - BOTTOM (LOOKING UP)

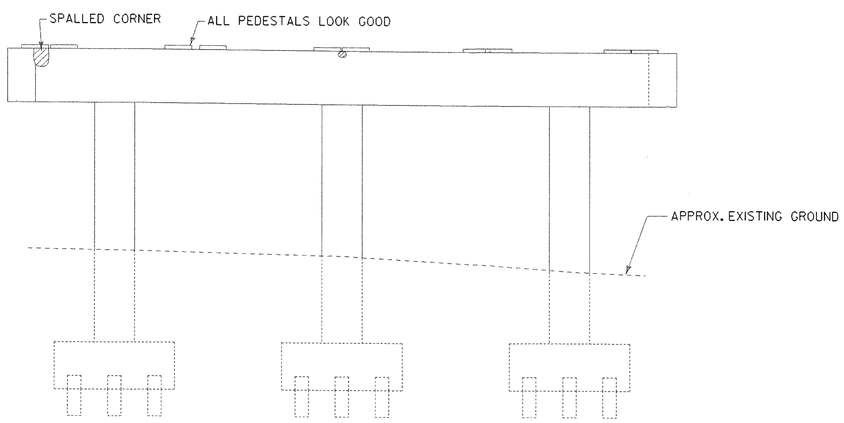

EAST ELEVATION

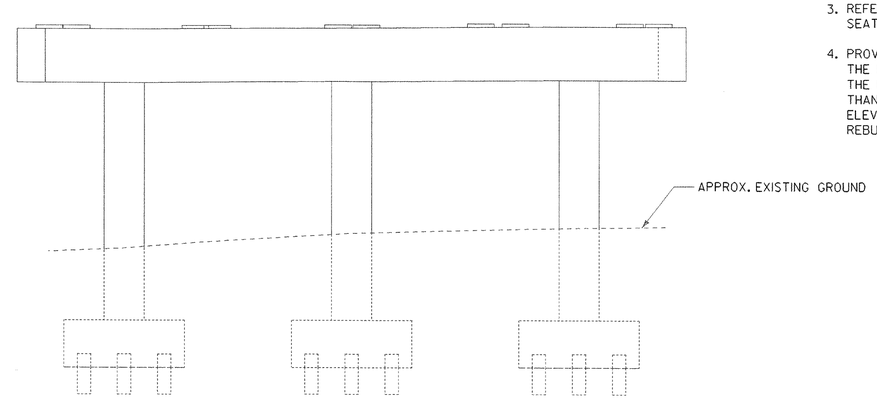

WEST ELEVATION

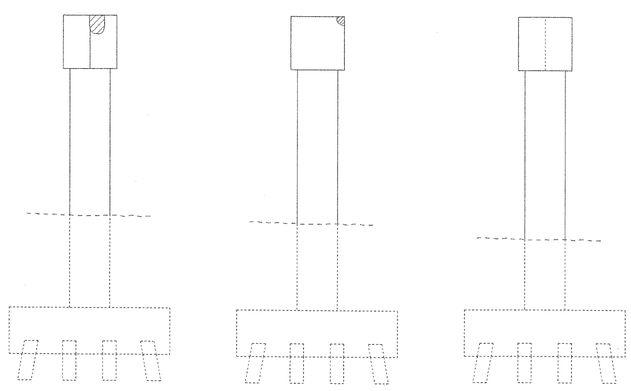

SOUTH FACE SOUTH COLUMN

SOUTH FACE MIDDLE COLUMN

SOUTH FACE NORTH COLUMN

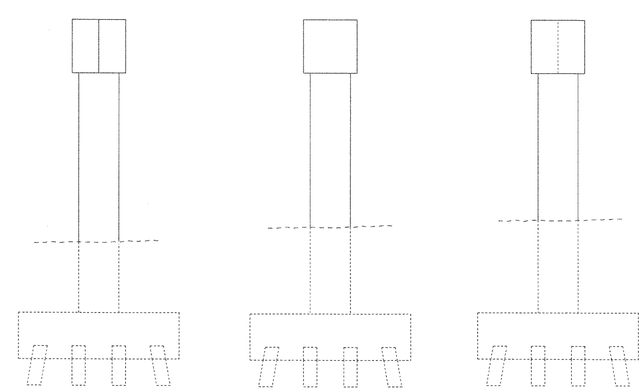

NORTH FACE NORTH COLUMN

NORTH FACE MIDDLE COLUMN

NORTH FACE SOUTH COLUMN

NOTES:

1. ELEVATIONS ARE REFERENCE ELEVATIONS BASED ON SURVEY DATA.
2. REMOVE AND REBUILD NOTED PEDESTALS PER DETAILS GIVEN ON SHEET 36.
3. REFER TO SHEET 36 FOR THE PIER BEAM SEAT ELEVATIONS.
4. PROVIDE A SHIM IN ACCORDANCE WITH THE DETAILS GIVEN ON SHEET 21 WHEN THE PIER BEAM SEAT ELEVATION IS HIGHER THAN THE EXISTING PIER BEAM SEAT ELEVATION AND THE PEDESTAL IS NOT BEING REBUILT PER NOTE 2.

LEGEND:

- SPALL
- DELANIMATION
- SURFACE CRACK

SCALE 3/16" = 1'-0

1 0 2 4 6 8

STATE OF VERMONT
AGENCY OF TRANSPORTATION

Town Of HARTLAND	Bridge No. 38
Highway No. I-91	Log Sta. / Surv. Sta.
PIER NO. I	
REPAIR AREAS	
Designed By S. YONGHO	Drawn By N. HERRERA
Checked By S. YONGHO Date DEC. 2000	Bridge Design Supervisor E. JOHNSTON Date FEB. 2001
PROJECT HARTLAND	PROJECT NO. IM 091-1(36)
Drawing Name za272pr1.dgn	
Bridge Sheet No.	Sheet 32 of 85

STONE & WEBSTER, INC.

10-DEC-2002

v:\Struc\working\za272pr1.dgn