JOB NO. 253 | DRG. NO. J3A

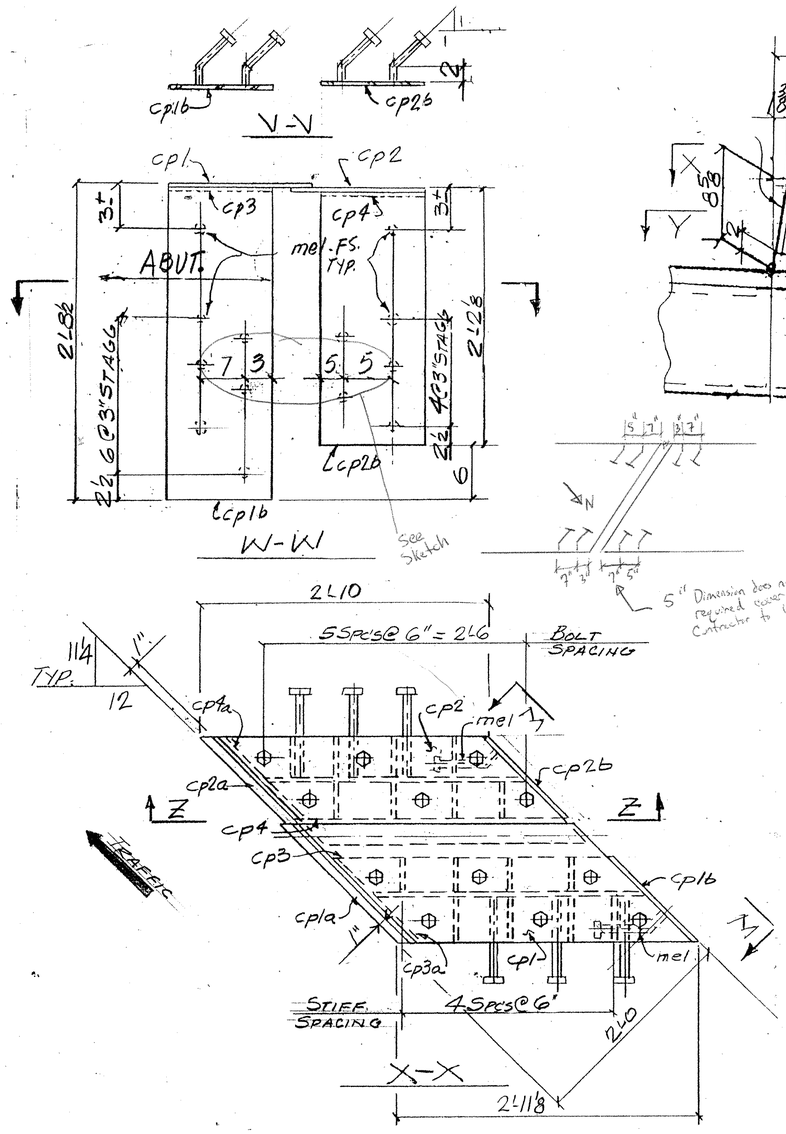

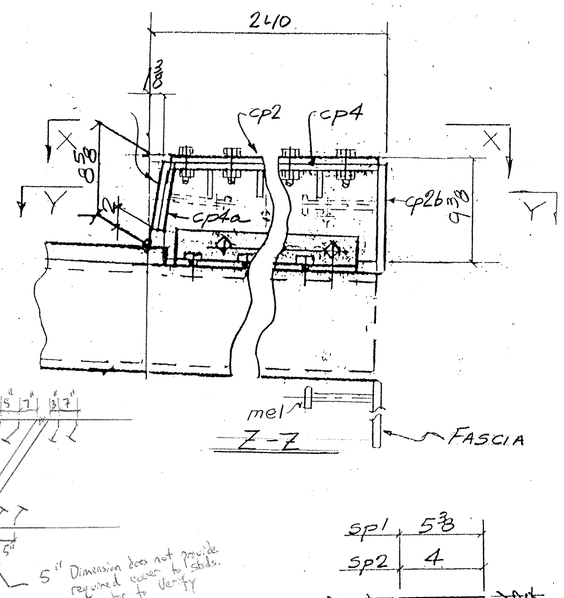

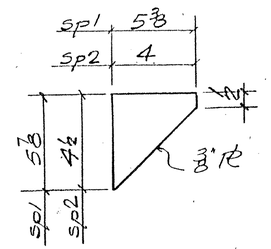

STIFF. DETAILS

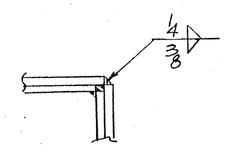

TYP. CORNER DET.

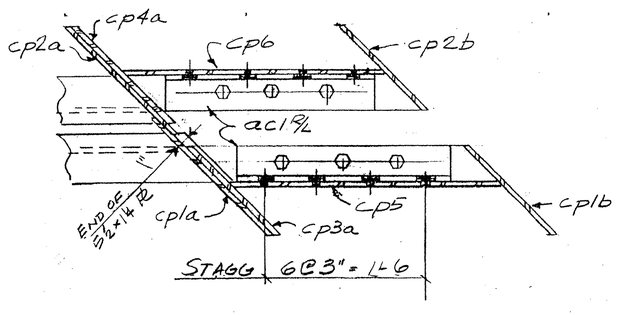

Y-Y

LEFT END BRUSH CURB SHOWN
RIGHT END - OPP HAND

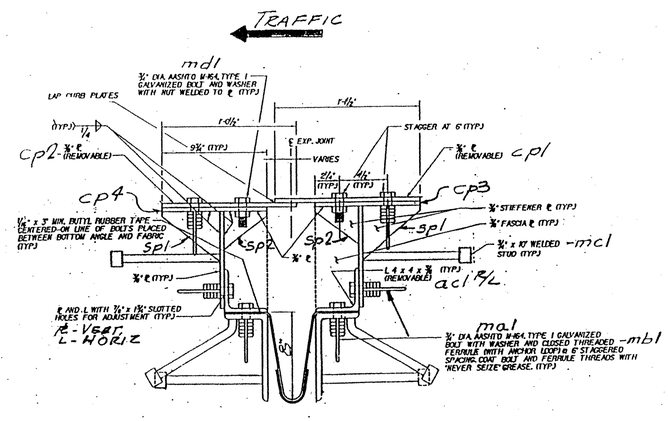

A-A

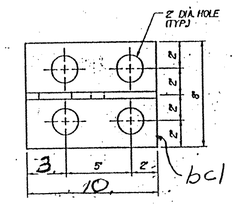

BRACKET PLAN

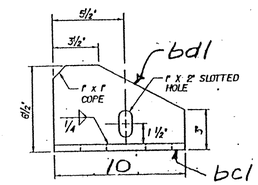

BRACKET ELEVATION

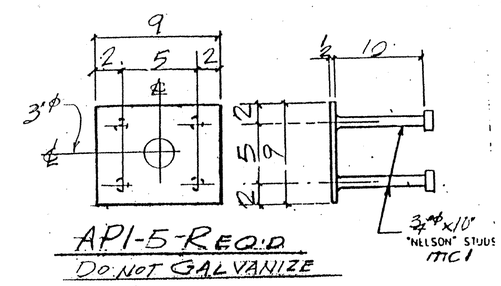

API-5 REQ'D
DO NOT GALVANIZE

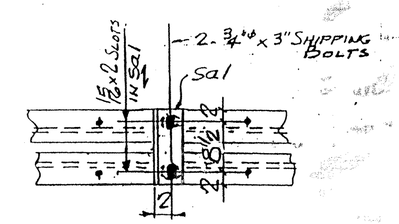

SHIPPING DEVICE
SPACED 5'-0" O.C. MAX. (9 REQ'D) EA. UNIT

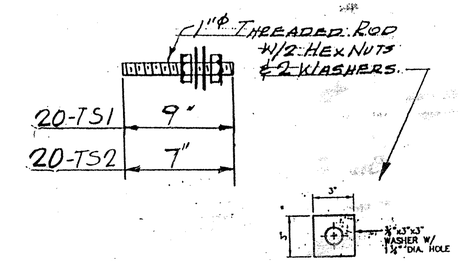

WASHER FOR BRACKET
W1

WORK THIS DWG. W/ DWG. J.

REV.	REMARKS	DATE	DWN	CHK	APP	Q.A.	NO.	DIA.	LGT	TYPE	WASHER
	OUT FOR APPROVAL	2/16/05									
	OUT FOR APPROVAL	1/0-15-05									
	ISSUED TO SHOP										
	FIELD & OFFICE										

PROJECT NO. IM-089-2(29) STATE BRIDGE NO.
MATERIAL: AASHTO M270GR36 ELECTRODES: E70 PROC HOLES: AS NOTED SHOP BOLTS:
SURFACE PREP. & PAINT:
GALVANIZED AFTER FAB

DESCRIPTION: EXP. JOINT - ABUT. 2
JOB: BRIDGE 5/S
I89 OVER U.S. ROUTE 2
BOLTON, VT.
CUSTOMER: WINTERSET INC.

	DRAWN BY	DATE
	JPF	1-05
CHKD BY	E.J.	
APPROV BY		
Q.A.		

CASCO BAY STEEL STRUCTURES, INC.
75 SPRING HILL ROAD SACO, MAINE 04072
PHONE (207) 282-7360 FAX. (207) 282-1179

JOB NO. 253 | DRG. NO. J3A | REV. △

TVGA CONSULTANTS

☐ NO EXCEPTIONS TAKEN ☐ REJECTED
☒ FURNISH AS CORRECTED
☐ REVISE AND RESUBMIT

ENGINEER has reviewed Shop Drawings and Samples and other data which Contractor is required to submit, only for conformance with the information given in the Contract Documents and compatibility with the design concept of the completed Project as a functioning whole as indicated in the Contract Documents. Such reviews do not extend to means, methods, techniques, sequences or procedures of construction or to safety precautions and programs incident thereto. Contractor is responsible for dimensions to be confirmed and correlated at the job site; for information that pertains solely to the fabrication processes or to techniques of construction; and for coordination of the work of all trades.

BY: BDC
DATE: 7/20/05