JOB NO. 253 | DRG. NO. J1A

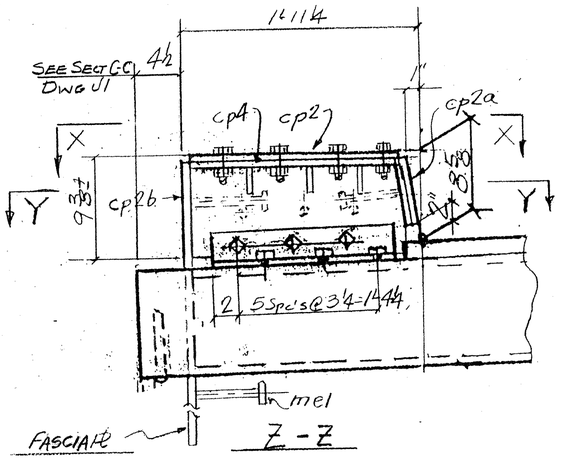

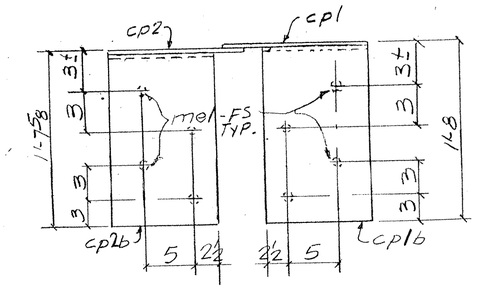

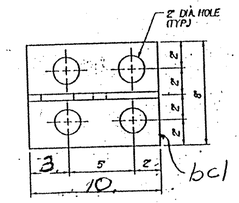

BRACKET PLAN

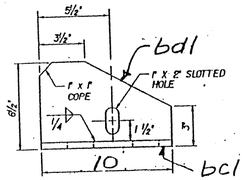

BRACKET ELEVATION

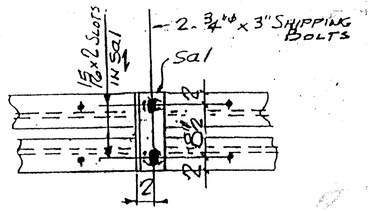

SHIPPING DEVICE
SPACED 5'-0" O.C. MAX. (9 REQ'D EA UNIT)

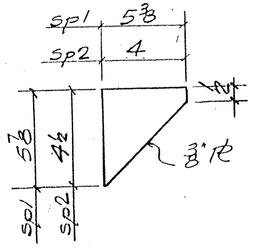

STIFF. DETAILS

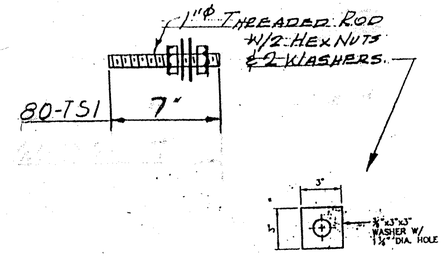

WASHER FOR BRACKET
W1

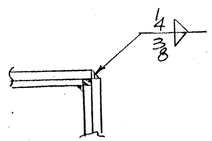

TYP. CORNER DET.

WORK THIS DWG. W/ DWG. J1

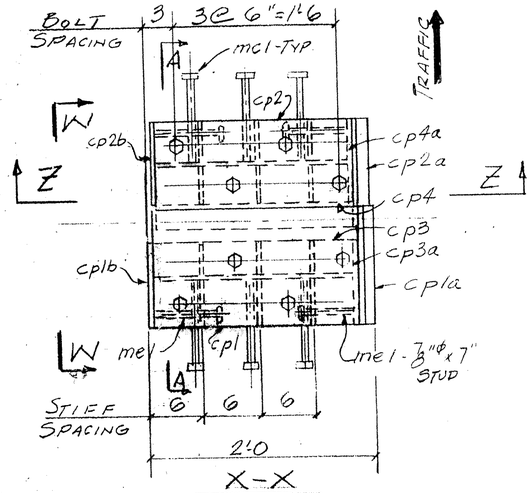

X - X

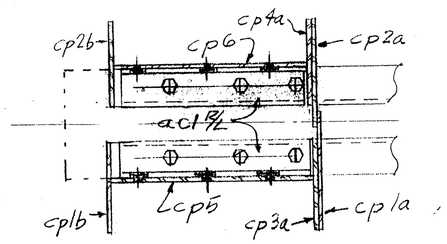

Y - Y

LEFT END BRUSH CURB SHOWN
RIGHT END - OPP HAND

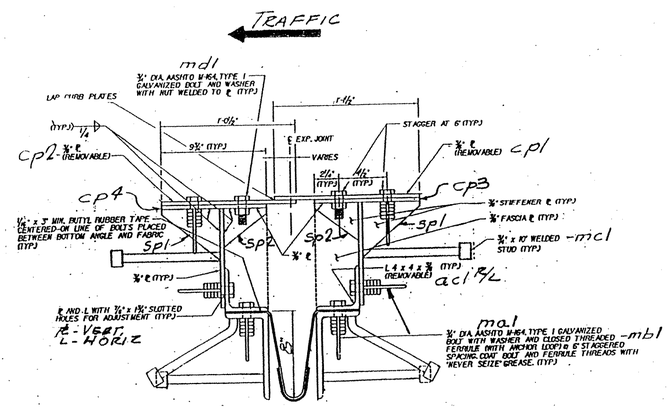

A-A

OUT FOR APPROVAL		2/16/05								
OUT FOR APPROVAL		6/15/05								
ISSUED TO SHOP										
FIELD & OFFICE										
REV.	REMARKS	DATE	DWN	CHK	APP	Q.A.	NO.	DIA.	LGT	TYPE	WASHER

PROJECT NO. IM-089-2(29) STATE BRIDGE NO.
MATERIAL AASHTO M270 GR36 | ELECTRODES: E70 PROC | HOLES: AS NOTED | SHOP BOLTS: 3/4" ϕ GALV.
SURFACE PREP. & PAINT:
GALVANIZED AFTER FAB

DESCRIPTION: EXP. JOINT - PIER 1
JOB: BRIDGE 51S & 51N
I 89 OVER U.S. ROUTE 2
BOLTON, VT.
CUSTOMER: WINTERSET INC.

	DRAWN BY	DATE
	JPF	1-05
	CHKD BY	
	Ed	
	APPROV BY	
	Q.A.	
	JOB NO.	DRG. NO.
	253	J1A
		REV.

CASCO BAY STEEL STRUCTURES, INC.
75 SPRING HILL ROAD SACO, MAINE 04072
PHONE (207) 282-7360 FAX. (207) 282-1179

TVGA CONSULTANTS
☒ NO EXCEPTIONS TAKEN ☐ REJECTED
☐ FURNISH AS CORRECTED
☐ REVISE AND RESUBMIT
ENGINEER has reviewed Shop Drawings and Samples and other data which Contractor is required to submit, only for conformance with the information given in the Contract Documents and compatibility with the design concept of the completed Project as a functioning whole as indicated in the Contract Documents. Such reviews do not extend to means, methods, techniques, sequences or procedures of construction or to safety precautions and programs incident thereto. Contractor is responsible for dimensions to be confirmed and correlated at the job site; for information that pertains solely to the fabrication processes or to techniques of construction; and for coordination of the work of all trades.
BY Bjc
DATE 7/12/05

B5414