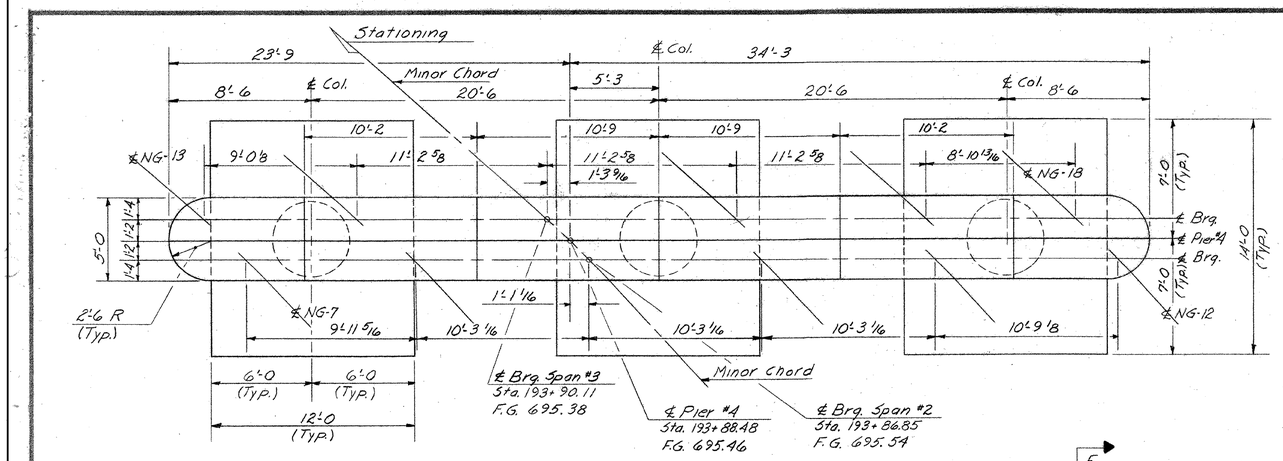

PLAN
SCALE 1/4"=1'-0

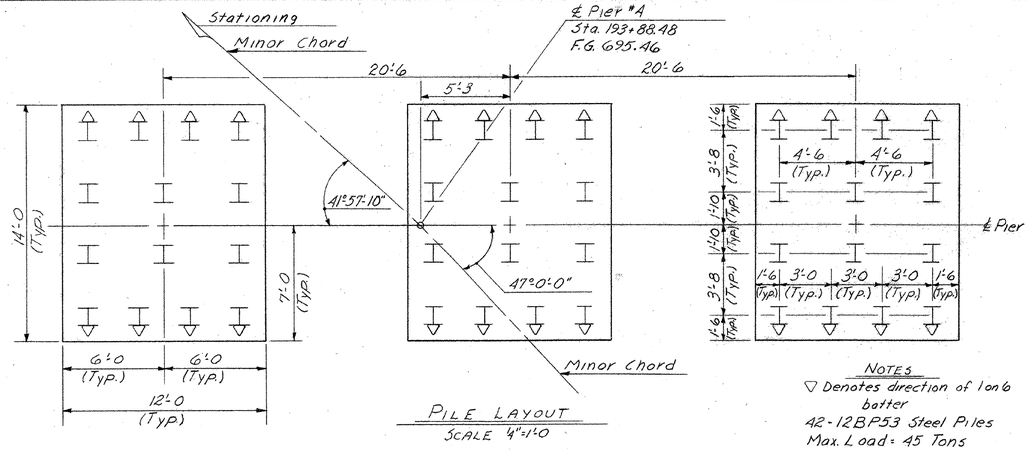

PILE LAYOUT
SCALE 1/4"=1'-0

NOTES

▽ Denotes direction of 1 on 6 batter

42-12BP53 Steel Piles
Max. Load = 45 Tons
Est. Length = 30 Feet

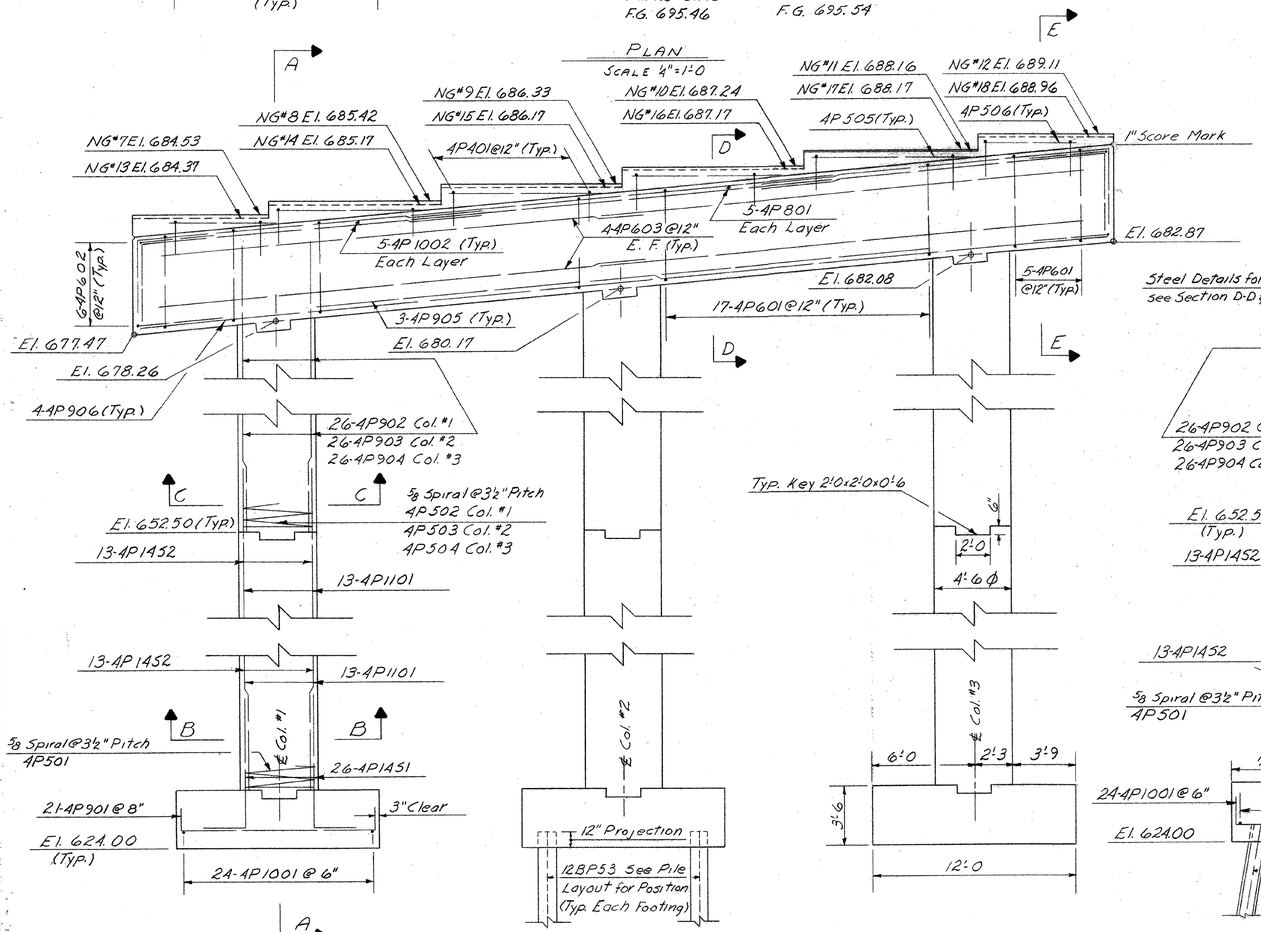

ELEVATION
SCALE 1/4"=1'-0

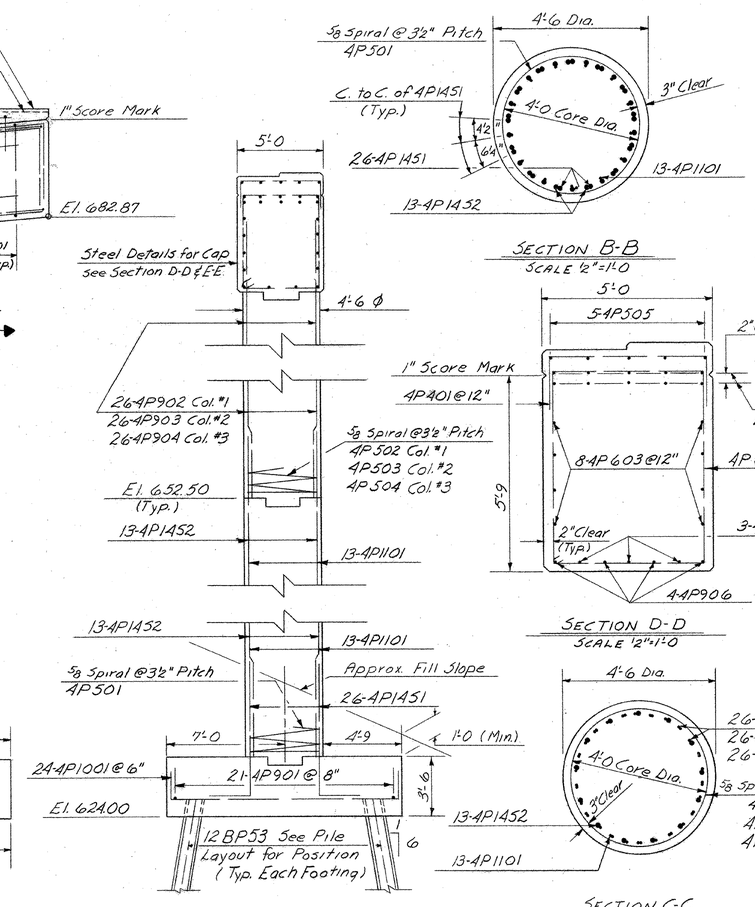

SECTION B-B
SCALE 1/2"=1'-0

SECTION A-A
SCALE 1/4"=1'-0

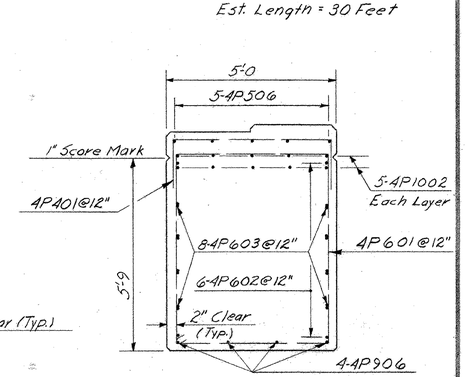

SECTION E-E
SCALE 1/2"=1'-0

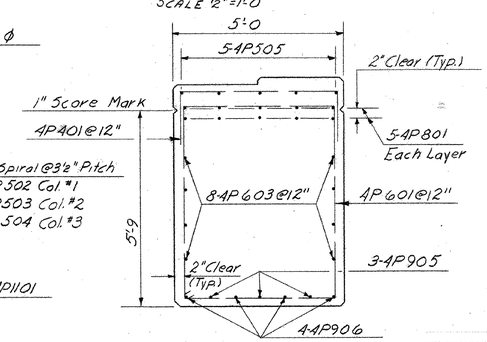

SECTION D-D
SCALE 1/2"=1'-0

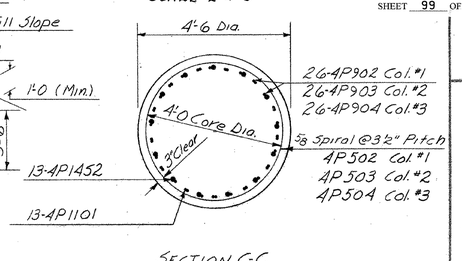

SECTION C-C
SCALE 1/2"=1'-0

For Pier Notes see BR. 419
For Piling Table see BR. 421

THIS SHEET FOR REFERANCE ONLY
BERLIN IM 089-1(20)
BRIDGES 40 N&S

SHEET 99 OF 104

STATE OF VERMONT
DEPARTMENT OF HIGHWAYS

PROJECT BERLIN-MONTPELIER
TOWNS OF BERLIN & MONTPELIER
ROUTE NO. I-89 STA. 193+50±
I-89 over VT #12
PIER #4
SCALE AS SHOWN
IN CHARGE W. SMITH
DRAWN BY EGILMAN CHECKED BY W. TRIPP 11-67
PROJECT NO. I-89-1(12)
SHEET 173 OF 497 BR A22