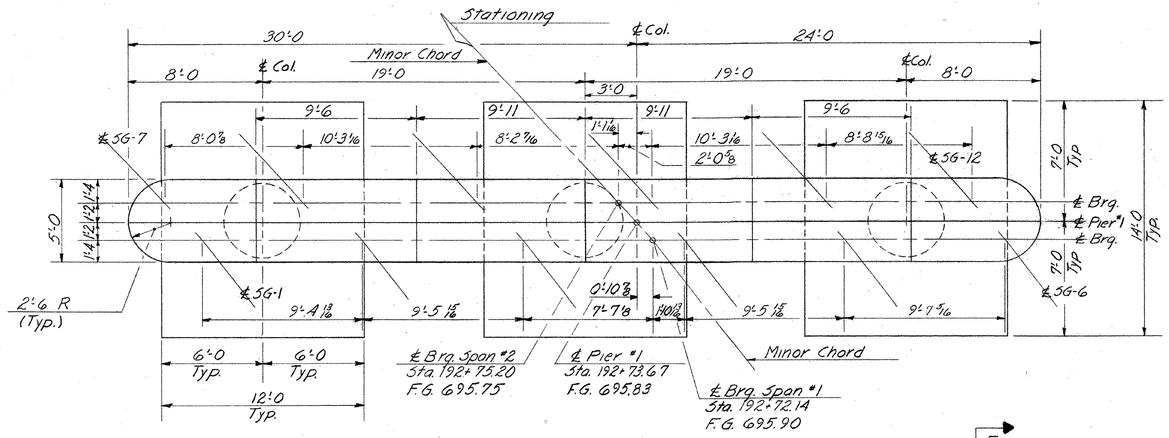

PLAN
SCALE 1/4" = 1'-0

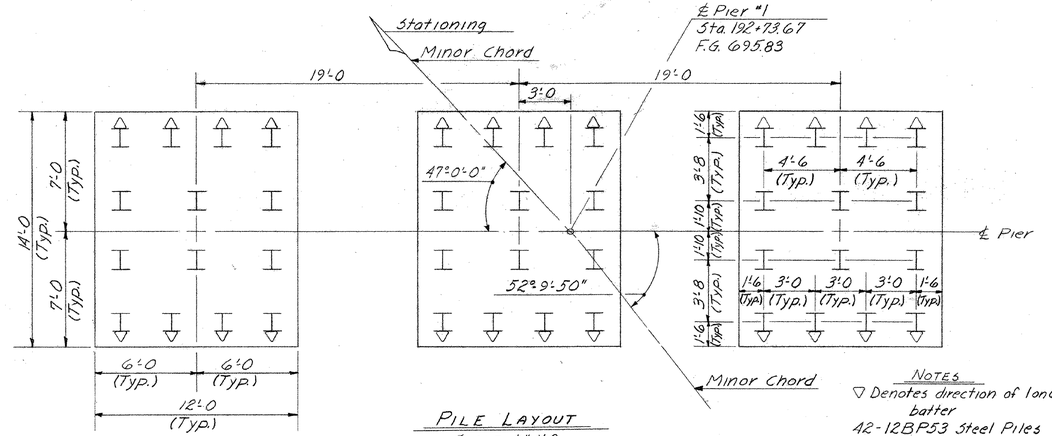

PILE LAYOUT
SCALE 1/4" = 1'-0

NOTES
▽ Denotes direction of 1on6 batter
42-12BP53 Steel Piles
Max. Load = 45 Tons
Est. Length = 35 Feet

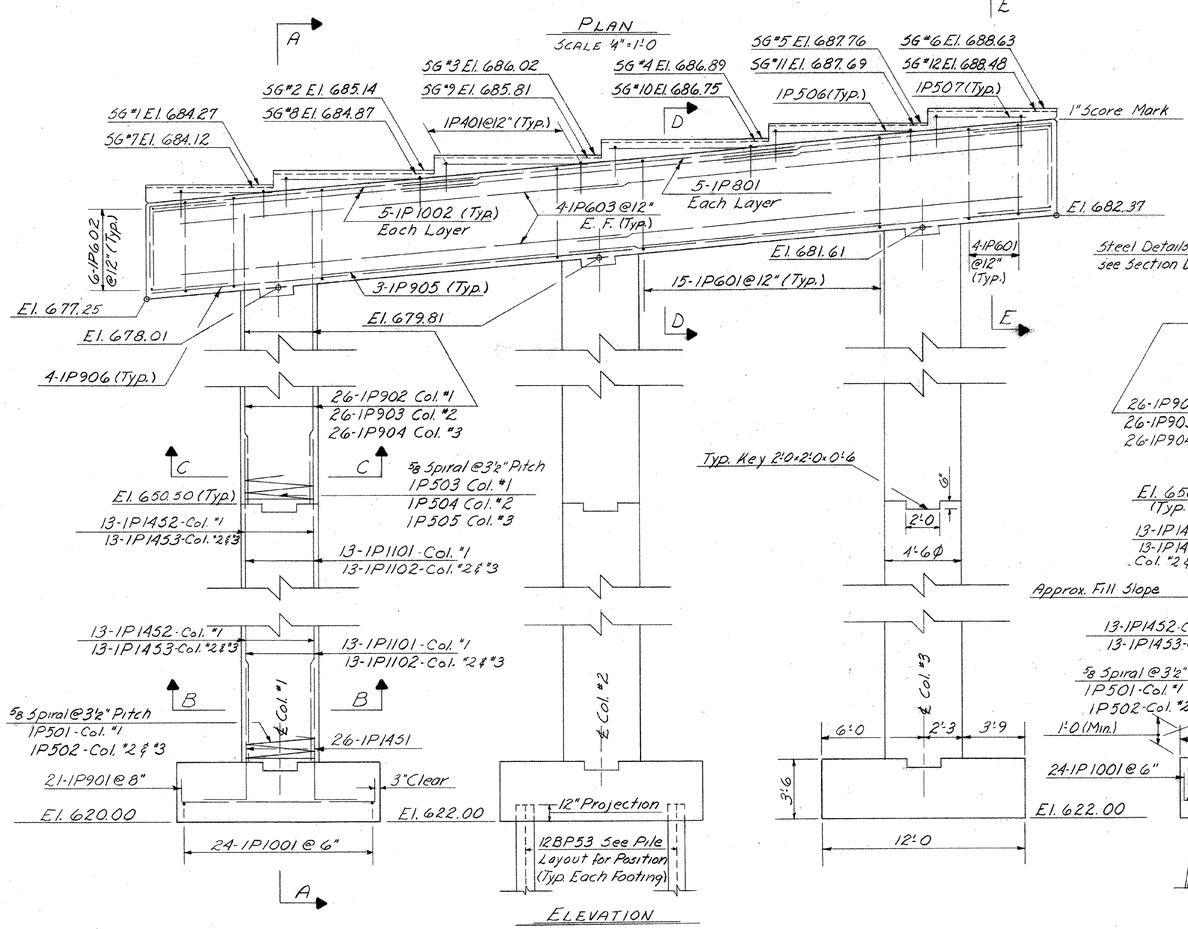

ELEVATION
SCALE 1/4" = 1'-0

SECTION A-A
SCALE 1/4" = 1'-0

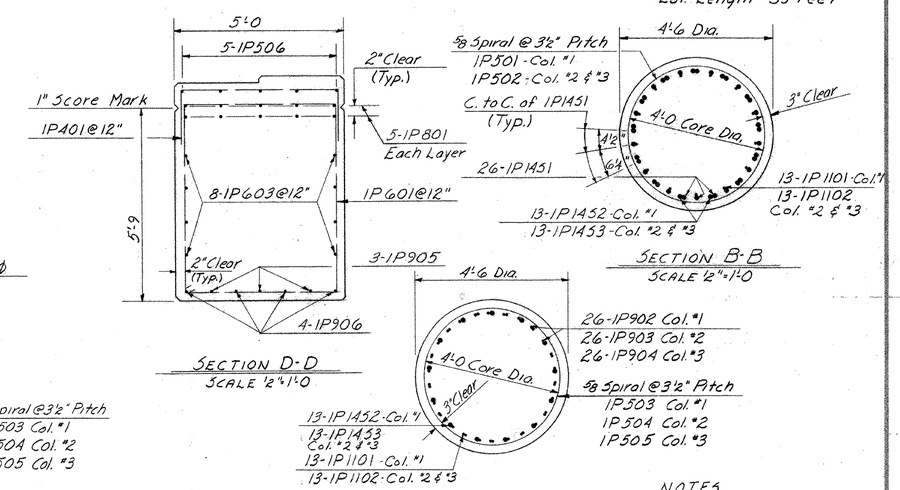

SECTION D-D
SCALE 1/2" = 1'-0

SECTION B-B
SCALE 1/2" = 1'-0

SECTION C-C
SCALE 1/2" = 1'-0

NOTES
1. For Piling Table see BR. 421
2. For General Notes see BR. 400
3. Pier Footings are to be Concrete Class B (mod.); Columns and Caps are to be Concrete Class AA (mod.)

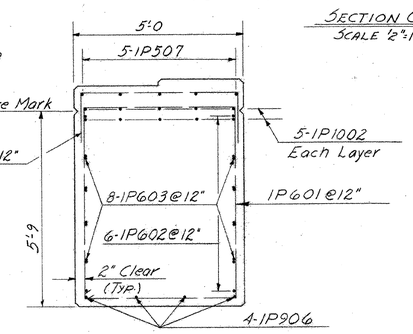

SECTION E-E
SCALE 1/2" = 1'-0

THIS SHEET FOR REFERANCE ONLY
BERLIN IM 089-1(20)
BRIDGES 40 N&S

SHEET 96 OF 104

STATE OF VERMONT
DEPARTMENT OF HIGHWAYS

PROJECT BERLIN-MONTPELIER
TOWNS OF BERLIN & MONTPELIER
ROUTE NO. I-89 STA. 193+50±
I-89 OVER VT. #12
PIER #1
SCALE: AS SHOWN
IN CHARGE W. SMITH
DRAWN BY F. GILMAN CHECKED BY W. TRIPP 11-67
PROJECT NO. I-89-1(12)
SHEET 170 OF 497 BR 419